Wobble

through your trouble!

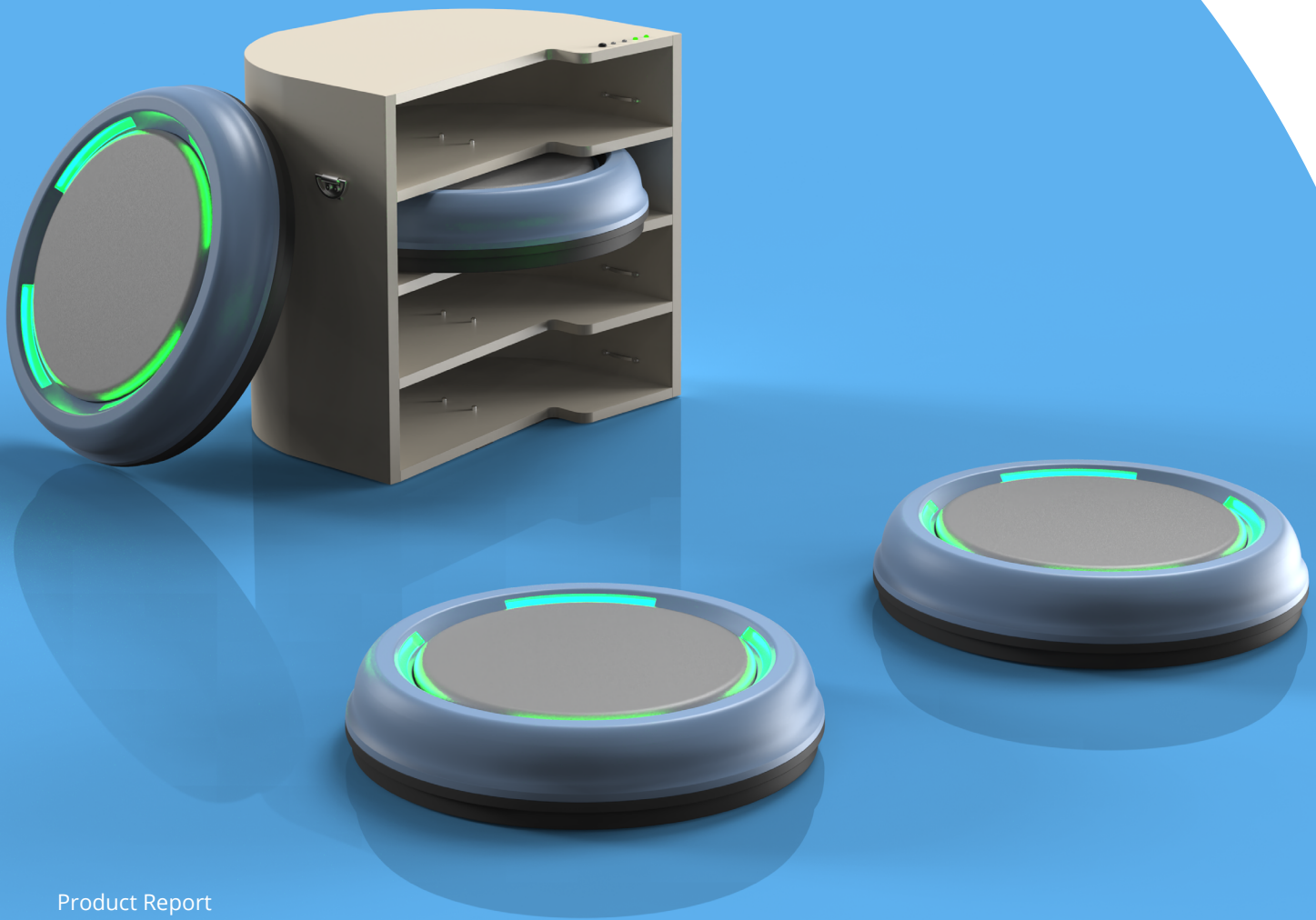

Product Report

Aalborg University | May 2024 |MA4-ID8
Philip Greth Faurschou, Kristian Faarup Hermansen & Line Brandt Hansen

Title Page

Title	Wobble - through your trouble!
Theme	Children's motor skills training gadget
Project	Master's thesis
University	Aalborg University
Education	Industrial Design
Report type	Product Report
Project team	MA4 - ID8
Project period	01.02.2024 - 30.05.2024
Main supervisor	Mário Barros
Co-supervisor	Benny Endelt
Pages	Pages 25

KRISTIAN FAARUP HERMANSEN

PHILIP GRETH FAURSCHOU

LINE BRANDT HANSEN

The Team



Abstract

This project is a master's thesis about the development of a new training toy, Wobble, for children with motor skills issues. These children need a helping hand, as a lack of motor skills often leads to low self-esteem and affects their ability to participate in social groups, making it even harder for them to improve. Motor skills issues are a serious problem and can have significant repercussions for children growing up leaving permanent marks.

Currently, there is a limited selection of solutions for these children. They mostly include professional help from physiotherapists, emphasising consistent training of the primary senses and postural control. While the training is made to help the children, it is often neglected due to a lack of both motivation from children and time from the parents' side to help them.

Wobble has been developed to mitigate children's motor skills issues by providing playful training games with a rewarding progression system that will help motivate them to improve, with less dependency on their parents' time. Wobble is a system consisting of three elements: a Wobble App, four Wobble Pads, and a Wobble Dock.

The Wobble App provides a guide for playing the games, while the Wobble Pads are the main physical training pads that register input for the game. Lastly, the Wobble Dock provides a home for the Wobble Pads, giving them a place for storage, charging, and transportation.

Table of Contents

The Struggles of DMCD	5
Creating Consistency	7
The Wobble System	8
Wobble App	10
Wobble Pad	14
Wobble Dock	16
Transportation of Wobble System	19
Sale	21
Dimensions	22
Specifications	23
Scalability for Future Possibilities	23



https://www.physio.co.uk/what-we-treat/paediatric/problems/neurological-problems/reduced-motor-skills/gross-motor-skills.php [Accessed 29 5 2024]



The Struggles of DMCD

Around 29% of the world's children experience difficulties with their motor skills, and 6% of these suffer from severe problems associated with the diagnosis of Developmental Motor Skills Disorder (DMCD). Problems related to DMCD can often be traced back to a lack of postural control, which refers to one's awareness of the body's centerline. This awareness is built on the combination of the sense of balance and the muscle-joint sense.

Most problems associated with DMCD can already be observed and discovered in children when they are around three months old. However, most cases of DMCD are first taken seriously when children reach school age (5-6 years). By this age, children might already have experienced obstacles that have lowered their self-esteem, and social outcasting that can result in bullying. Exposure to these lows can have serious consequences for the children following them into adulthood.

The treatment necessary to improve DMCD lies in consistency, which paradoxically is also the main problem. Most patients with the diagnosis are good at completing their daily home training in the first few weeks. Still, the lack of motivation to improve quickly degrades, and consistency is the next thing that follows. This is especially prominent when it comes to child therapy, where the people responsible for keeping up consistency are the parents, who already lack time daily. Having tired children on top of this can create more obstacles for the parents, resulting in conflicts, bad associations, and a hostile environment related to the training.



Creating Consistency

The Wobble System ensures optimal postural control training in the home's safe space while providing a variety of engaging, fun, and stimulating game experiences for children. This ensures motivation and consistency in their training. The assistance provided by Wobble also allows children to play and train their gross motor skills independently without needing parental supervision, freeing up time for parents and creating an independent and positive association with physical therapy training. Wobble provides extra motivation for the children by offering a daily task, which the children complete by playing and finishing six games daily.



The Wobble System

The Wobble system consists of three products: the Wobble Pad, Wobble Dock, and Wobble App. Together, they create the perfect home training and playing setup for children with postural control challenges.

The system is based on everyday games that children know and find fun. The games focus on challenging postural control and enhancing children's strength and balance, which results in healthier children who will eventually feel more in control of their bodies

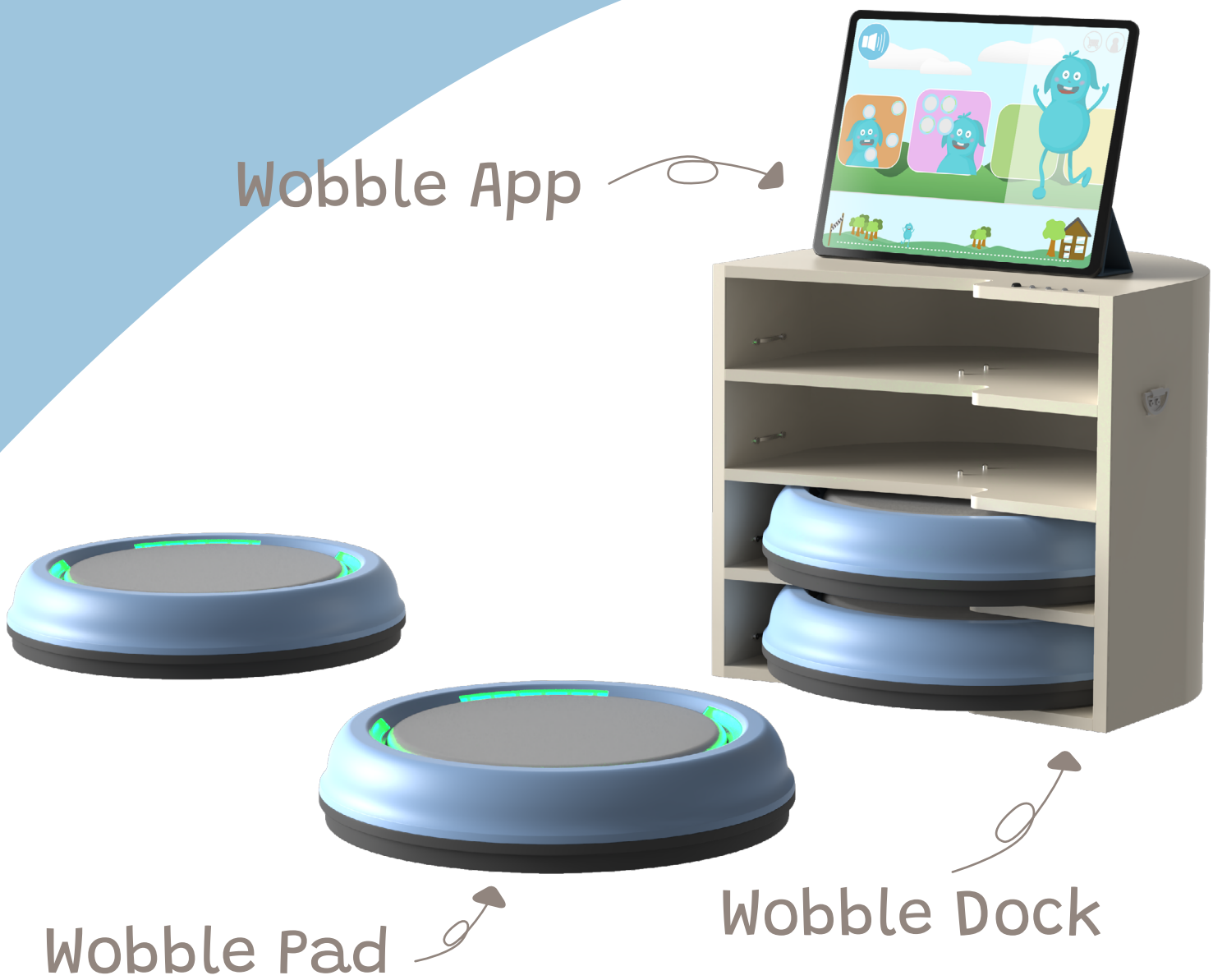



Wobble App

The Wobble App is the hub, control centre, and data collector. It contains the friendly helper Wobble, who guides the user through the initial set-up as well as starting, and stopping games. With children, it is important to visualise numbers. This is done with a journey for Wobble, where the goal is to help Wobble home.

Two games have been developed for use with the Wobble Pads: one that focuses on balance and strength and another that focuses on orientation and reaction. The games are based on everyday games like those children already know and love from kindergarten but brought into the home.



Introducing Wobble your Personal Guide



Give a warm welcome to Wobble! Your friendly personal guide and helper within the app.

Wobble is always ready to help you with the games, including instructions and set-up.

While knowledgeable, Wobble tends to be poor at finding his way home. This makes your noblest task to guide him home safely. The task is completed by playing and finishing at least six games.

The Wobble Games

Welcome to the Wobble App's home page! The Home page allows you to select a game to play, control the volume and see your progress!

Are you getting better and are the game not difficult enough anymore? If that is the case, go find an adult and enter the grown-up section for difficulty scaling the individual games.

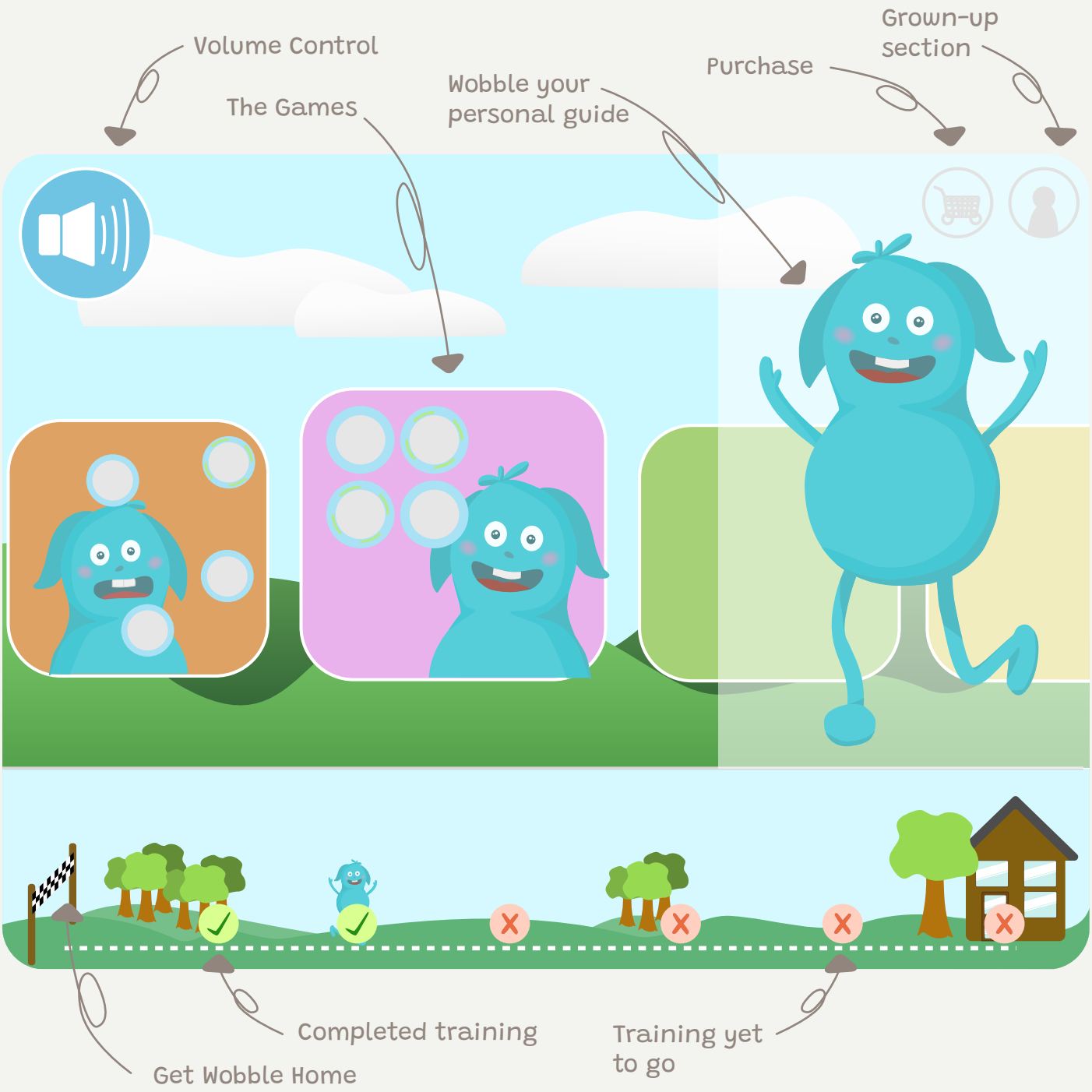





Follow Wobble

This is a game of balance and strength based on Follow My Leader.
Look at the tablet and do as Wobble shows.

In this game, the user is challenged to keep balance on top of the dynamic surface found on the Wobble Pads. This prompts the user to move around, turn their head upside-down, and get into different and challenging positions.

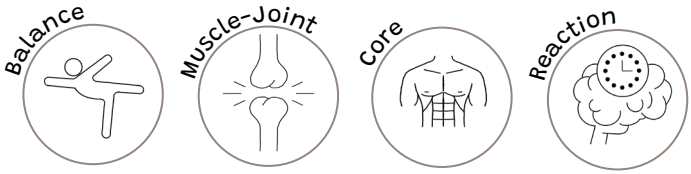



Wobble Tag

This is a game of reaction based on Tag.
Wobble Tag makes the Wobble Pads light up in short periods prompting the user to catch the correct Wobble Pad in time.

The user has to orient themselves to find the one that lights up. Having found the right one run to it, bend down, tap it with a hand, and then stand back up to catch the next one.



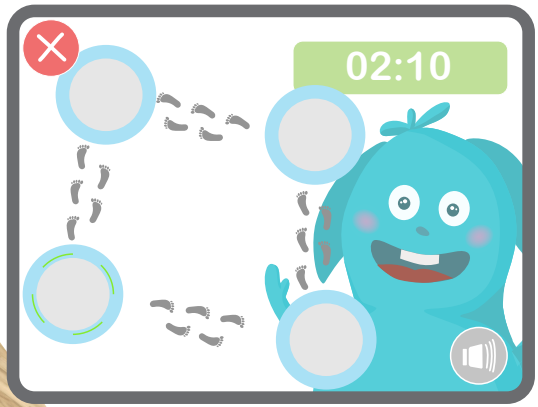

Wobble Pad

The Wobble Pads are toys with guiding lights and dynamic surfaces that challenge the user's postural control through fun and games.

The Wobble Pads feature two hours of game time each with a two-hour charging time from nothing to a full charge.

No space, no problem!

The Wobble system is dynamic and can be placed in various ways to challenge the user. The dynamic placement can also fit into smaller spaces if there is little room to spare. Because of a Bluetooth connection between the Wobble Pads, it is even possible to place the pads out of sight, challenging the user in a new way by making them more dependent on their ears for sound localisation of the Wobble Pads.



Did you Know?

The Wobble Pads track your movement and engagement in the games through piezoresistive sensors. This ensures that the games are played correctly and allows for progression tracking.

The Dynamic Surface

The dynamic surface is an essential part of the Wobble Pad. The dynamic surface is a soft PUR foam that makes the ground wobbly and activates the smaller balancing muscles throughout the body. This makes it an excellent tool for stimulating postural control.

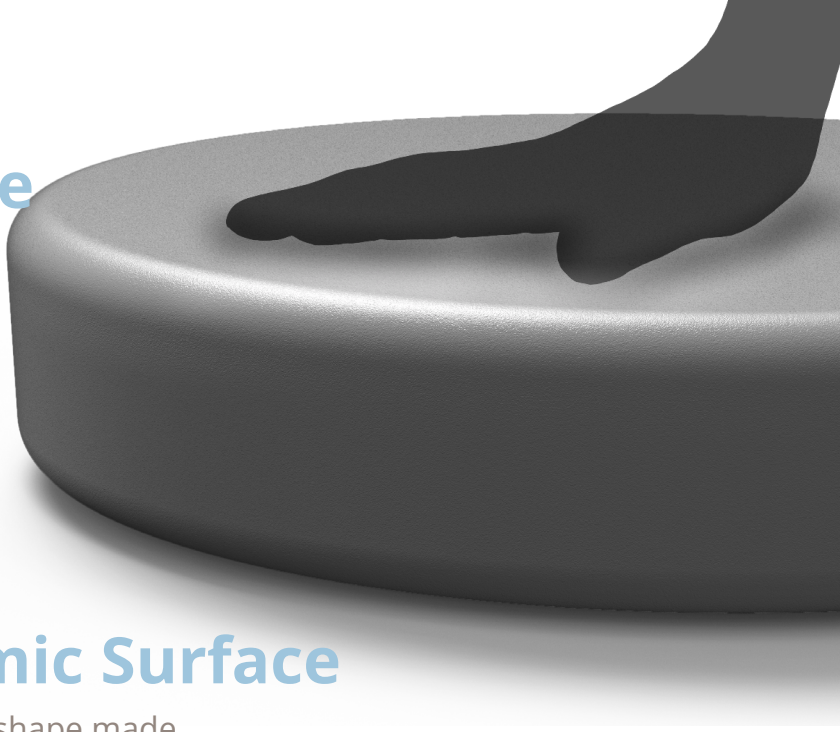

Changing the Dynamic Surface

The dynamic surface consists of a circular shape made from PUR foam.

The surface is also coated with a PUR solution to create an easy-to-clean surface with anti-slip properties. As wear and tear over time is inevitable on the dynamic surface, it is held in place using magnets, making it easily replaceable when worn out.



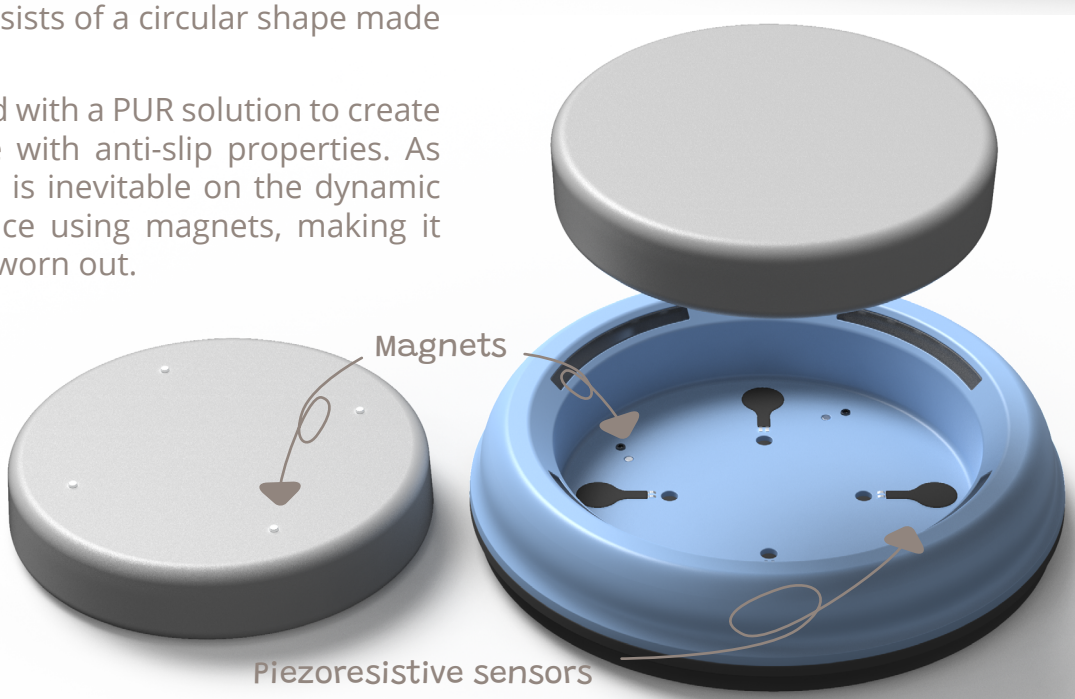

Anti-slip

Wobble is committed to ensuring safety while playing on every surface, so it has been equipped with anti-skid protection in the form of neoprene feet fixing it to slippery surfaces.

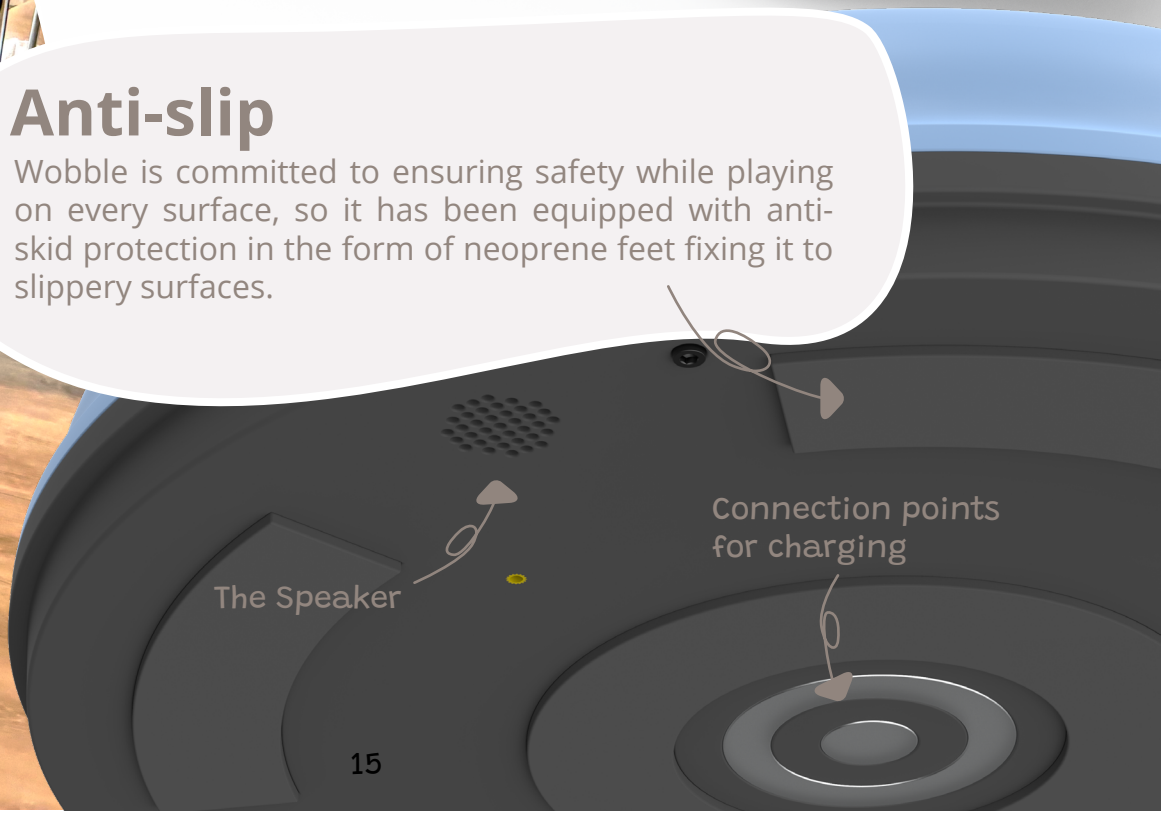

Wobble Dock

The Wobble Dock is the home and charging system for the Wobble Pads. It is designed with an emphasis on being a neutral addition to the home interior, allowing it to be a permanent part of the living room. This also makes it easy and tempting for the children to access.

The Wobble Dock is to be connected directly to a power outlet to ensure efficient charging. It is equipped with LED indicators for clear communication of the charging status, signalling when the Wobble Pads are ready for another run.



Done Playing? Recharge Wobble for the Next Session

Have you had a great time and are you done playing?

Simply put the Wobble pads into the Wobble Dock's compartments, and they will start recharging instantly so they are ready for the next play session.

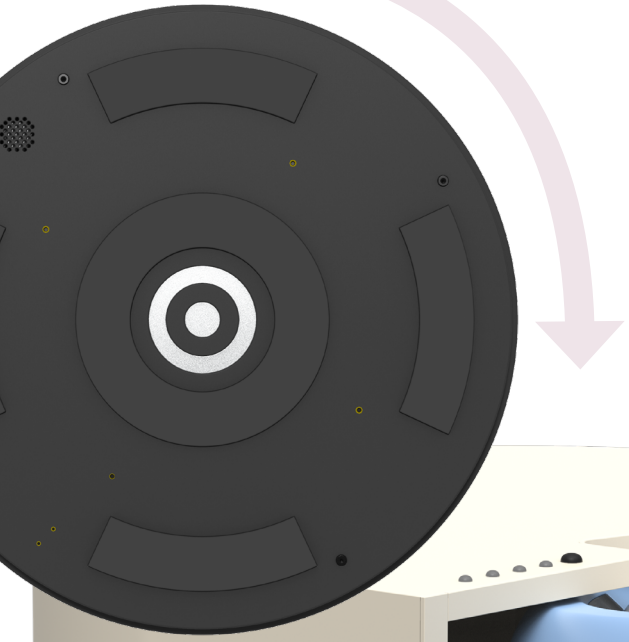

Unoriented Mounting

Inserting the Wobble Pads has been made simple for individuals of all ages by using spring-mounted connection points within the shelves. These points connect to the Wobble Pads' circular charging interface, which allows them to be held in place regardless of their horizontal orientation. When the springs are pressed down, the charging sequence initiates.

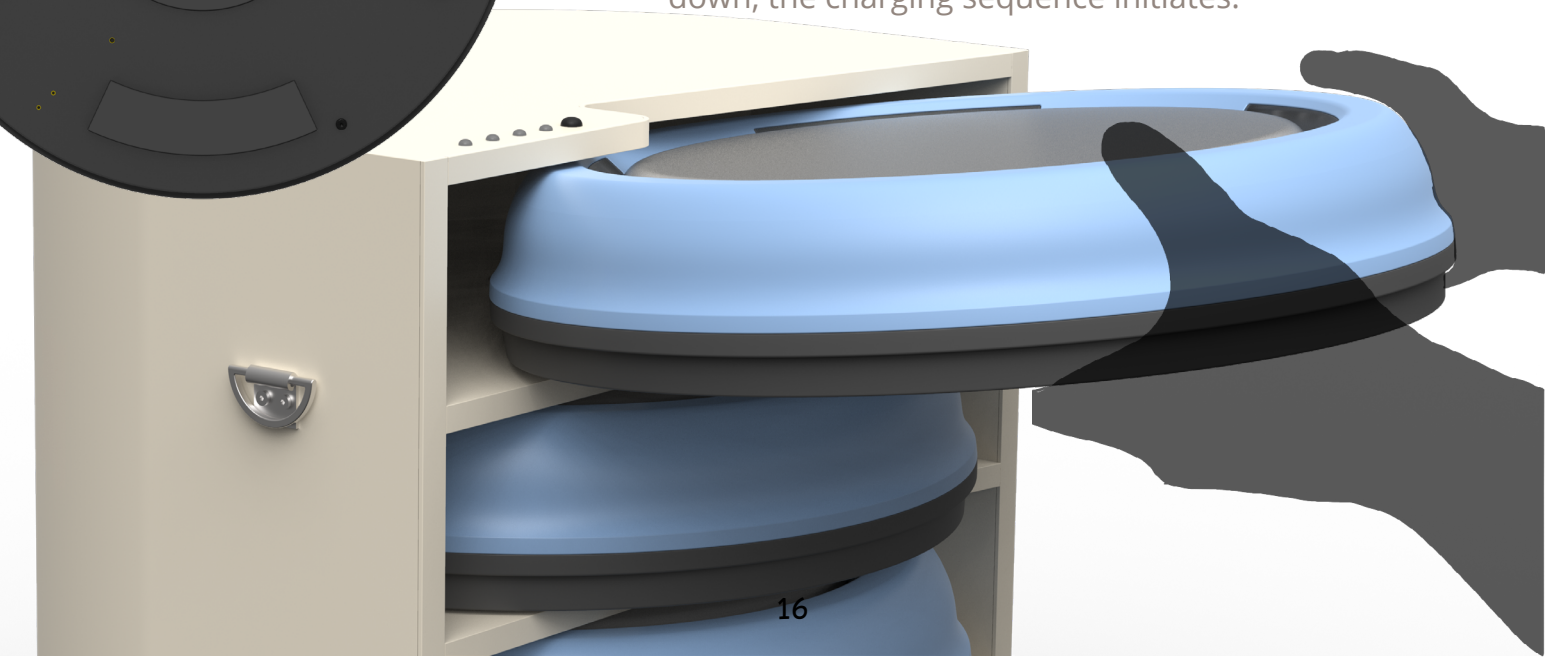

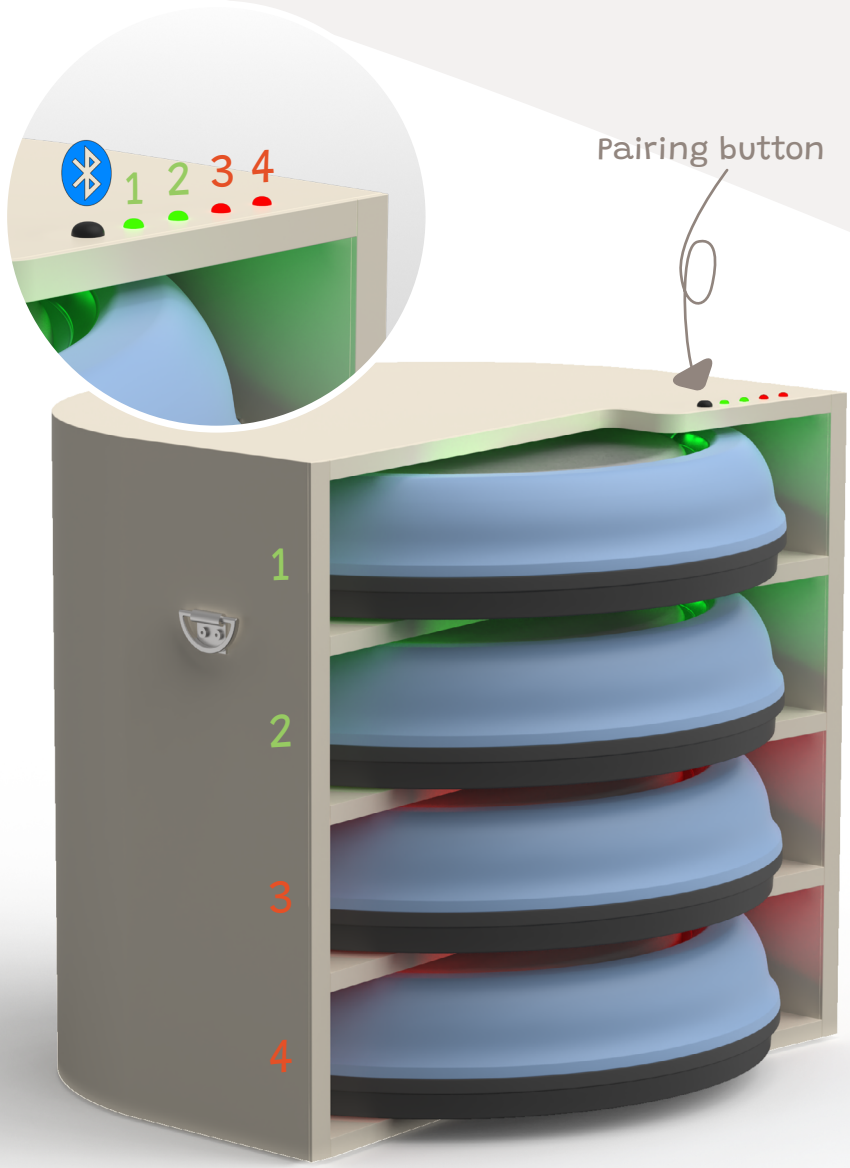

Battery Indicator

When the Wobble pad is at more than 50% charge the LEDs illuminate in bright green while saying “Battery 100%”.

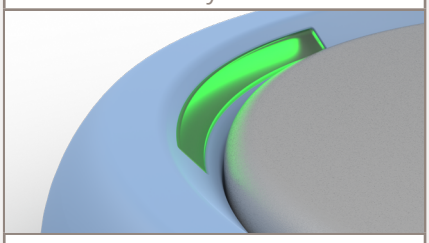

When the Wobble pad is between 50% and 15% charge, the LEDs illuminate in bright yellow while saying “Battery 50%”.

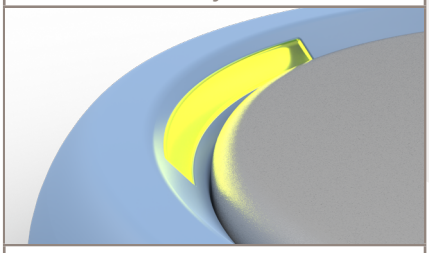

When the Wobble pad is between 15% and 5% charge, the LEDs illuminate in bright red while saying “Battery 15%”.

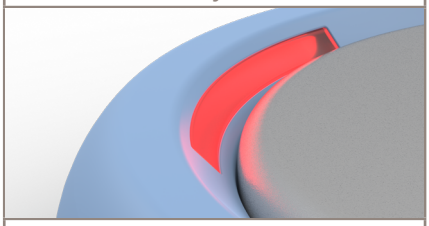

When the Wobble pad is below 5% charge, the LEDs illuminate in a blinking manner with a bright red while saying “Battery low”.

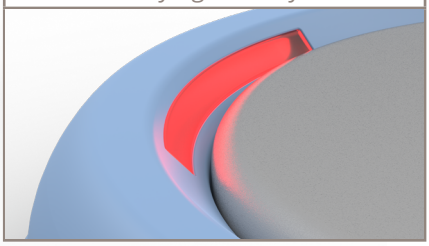

Charging and Storing are Made Easy with Wobble Dock

Wobble will let you know when the Wobble Pads are ready to go again through a notification on the app or the light indicator on the Wobble Dock.
The indicators at the top of the dock visually indicate if the Wobbles are done charging; Red - not recharged and Green - fully recharged. Each time a Wobble Pad is removed, a sound indicator will tell how much power is left on the battery.

Creating Sustainability by Ensuring Easy Repairability

Wobble is designed with sustainability in mind. Mechanical fastening techniques ensure easy replacement of critical parts such as the dynamic surface and electrical components

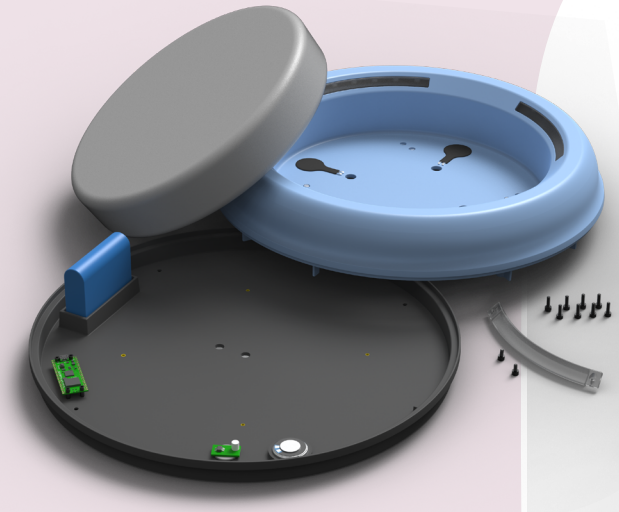

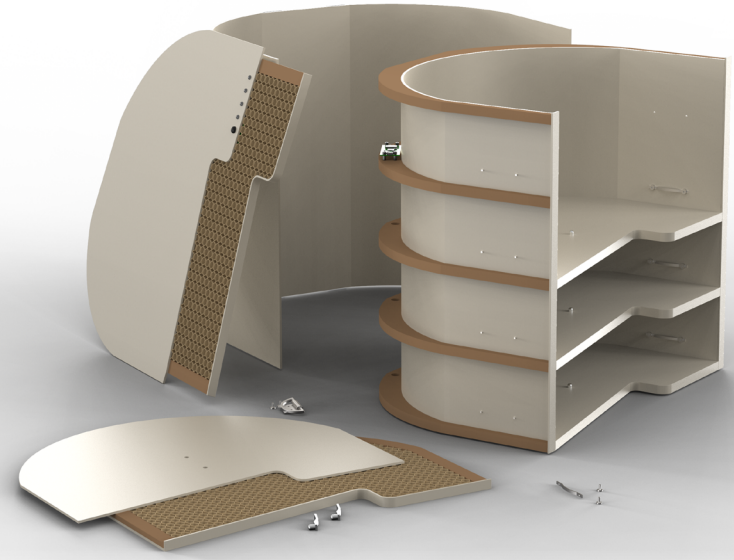

Connecting to Bluetooth

For ease of use, a button for Bluetooth pairing has also been integrated, making it seamless to pair all of the Wobble Pads with your device simultaneously. When connected, the experience is set up for play!

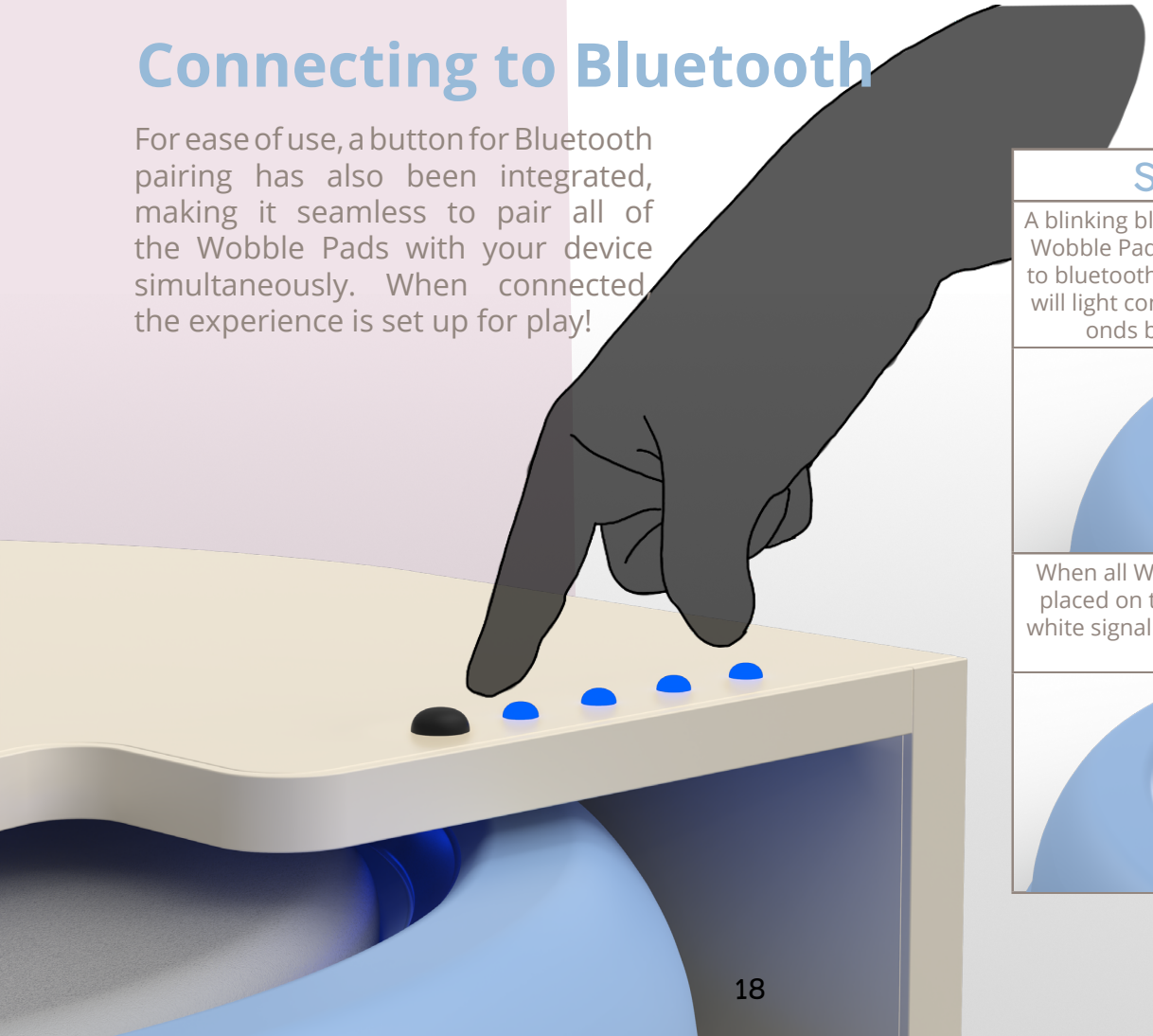

Signals

A blinking blue light signals that the Wobble Pads are ready to connect to bluetooth, when connected they will light constant blue for ten seconds before turning off.

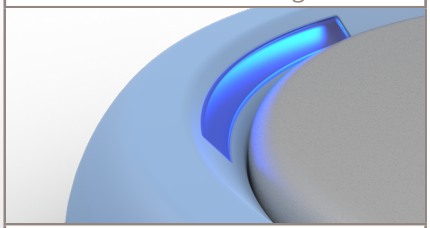

When all Wobble Pads have been placed on the floor they will light white signalling that they are ready for play.

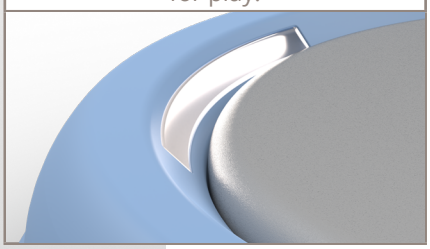

Holding the Wobble Pad

With their lightweight and sharp edges, the Wobble Pads are easy for the user to grab and move. Their concave curve fits the ergonomics of your hands, and the edges provide enhanced handling stability while transporting them.



Transportation of System

The Wobble system can be transported from room to room and house to house. Its small size and light weight make it possible to transport it anywhere desirable. Just use the attached carrying handles or attach a shoulder strap if desirable. Then the only thing left to do is put the system into the back of the car and you are ready to go!

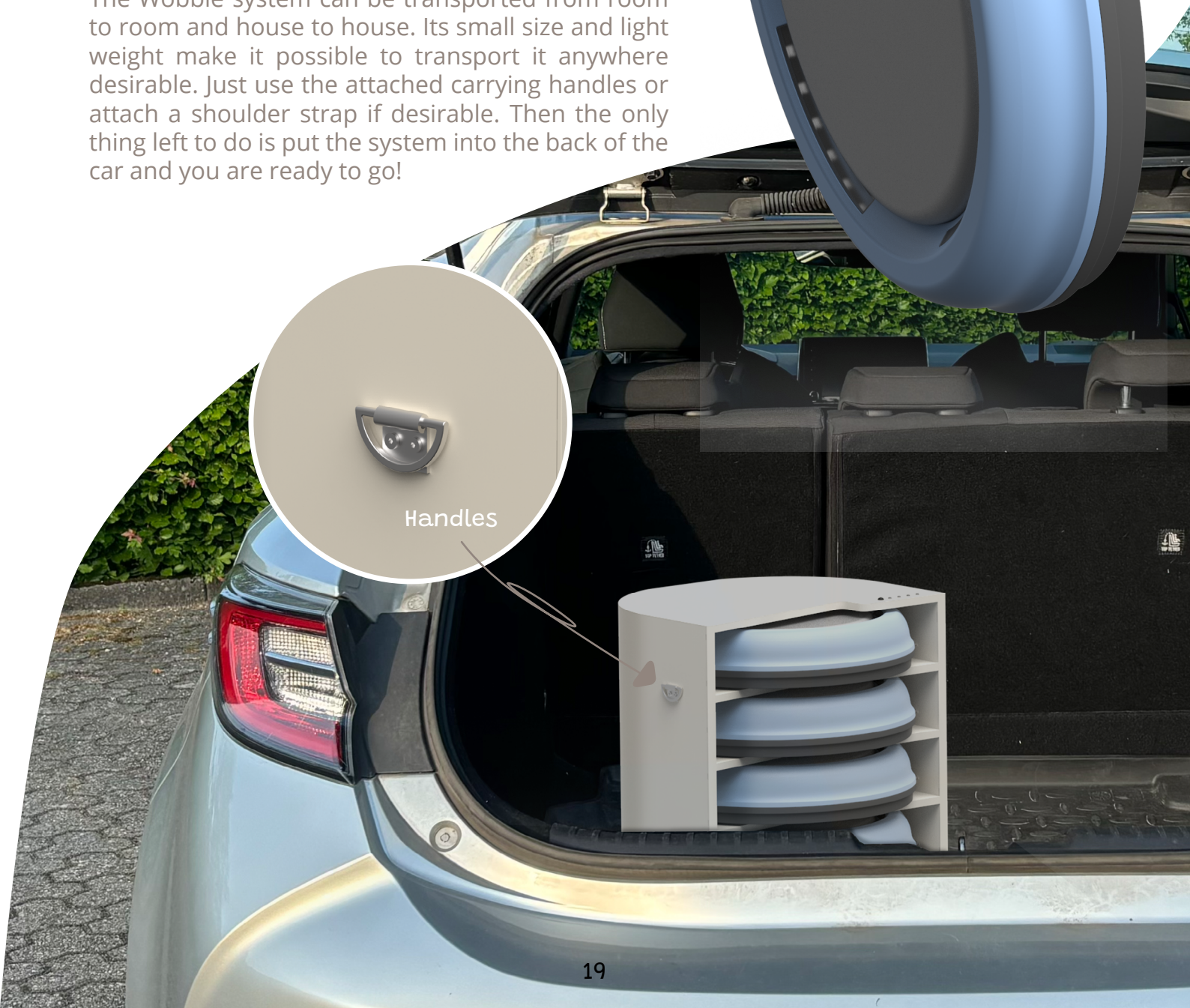

Create Your Own Challenges

One way to change the level of difficulty is to use the app's difficulty scaling; another is to add the Wobble Pads to your own obstacle courses for an added challenge. This encourages the user to be creative, urging them to jump, crawl and balance on their way to the next Wobble Pad before the time runs out.



The Wobble System

Age 5+





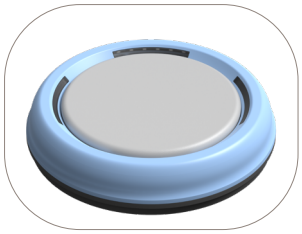

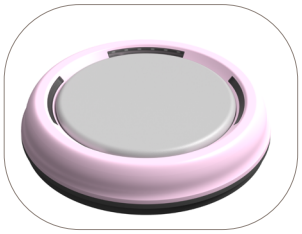

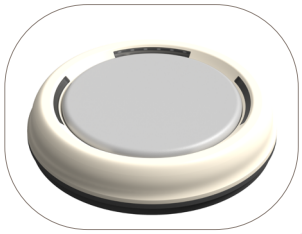

Product Description

Wobble is an indoor motor toy that encourages training through play. It comes in three colours: light blue, light pink, and beige. Wobble features three games out of the box available in the app, while upcoming games will be available for purchase in the app for 29 DKK per game. You can also choose a monthly subscription for 39 DKK to gain access to all available games!

Specifications

- 4xWobble Pads
- Wobble App
- Wobble Dock
- Dynamic Surface
- Two hours of play
- Max 120 kg
- Bluetooth 5.0
- LED RGB lighting

5.499,-

Add to Bag

Dimensions





Total Wobble Dock
Weight: 4,3 KG

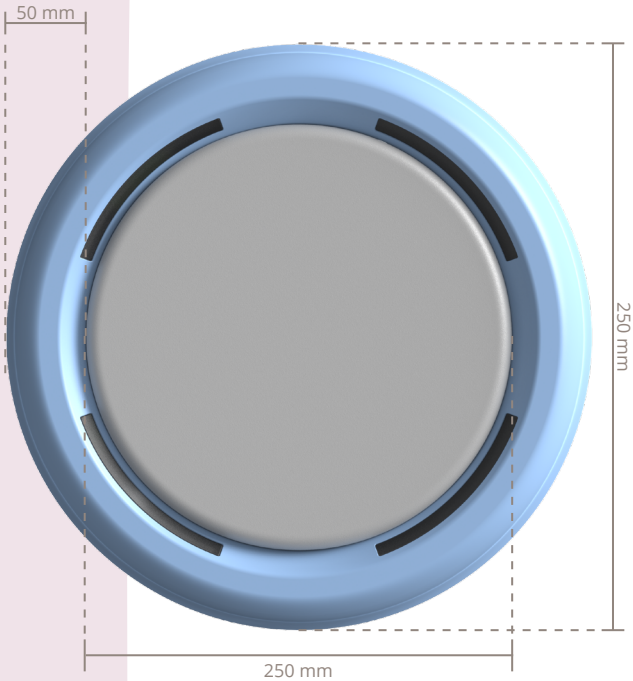

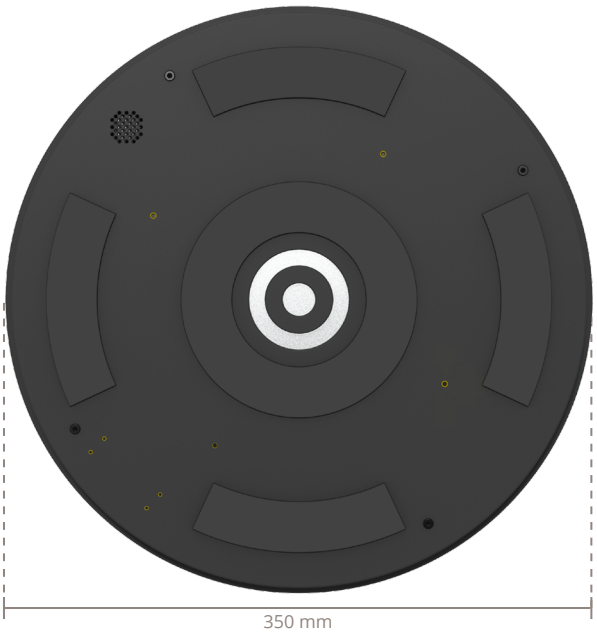

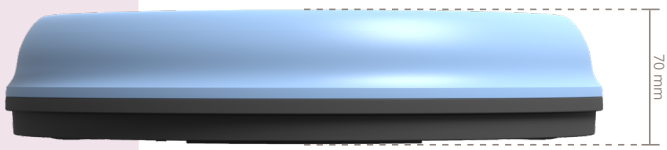

Total Wobble Pad
Weight: 1,2 KG



Specifications

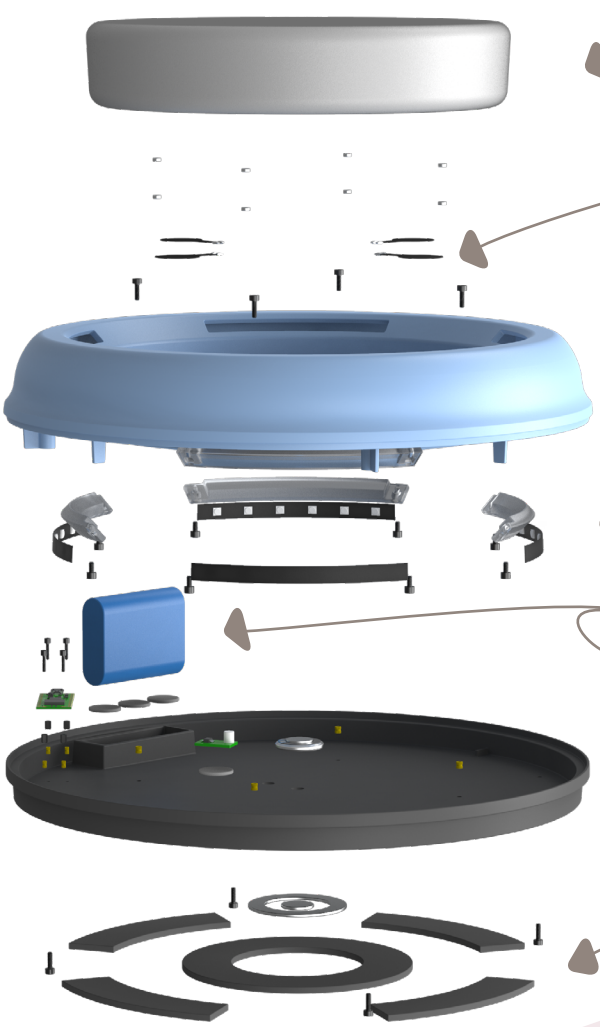

Dynamic Surface

Piezoresistive sensor

Outer Shell in PC/ABS makes Wooble extra durable

Light guide in PC

12V 1200 mAh battery

Bottom Plate in PC/ ABS

Neoprene Anti-slip Feet

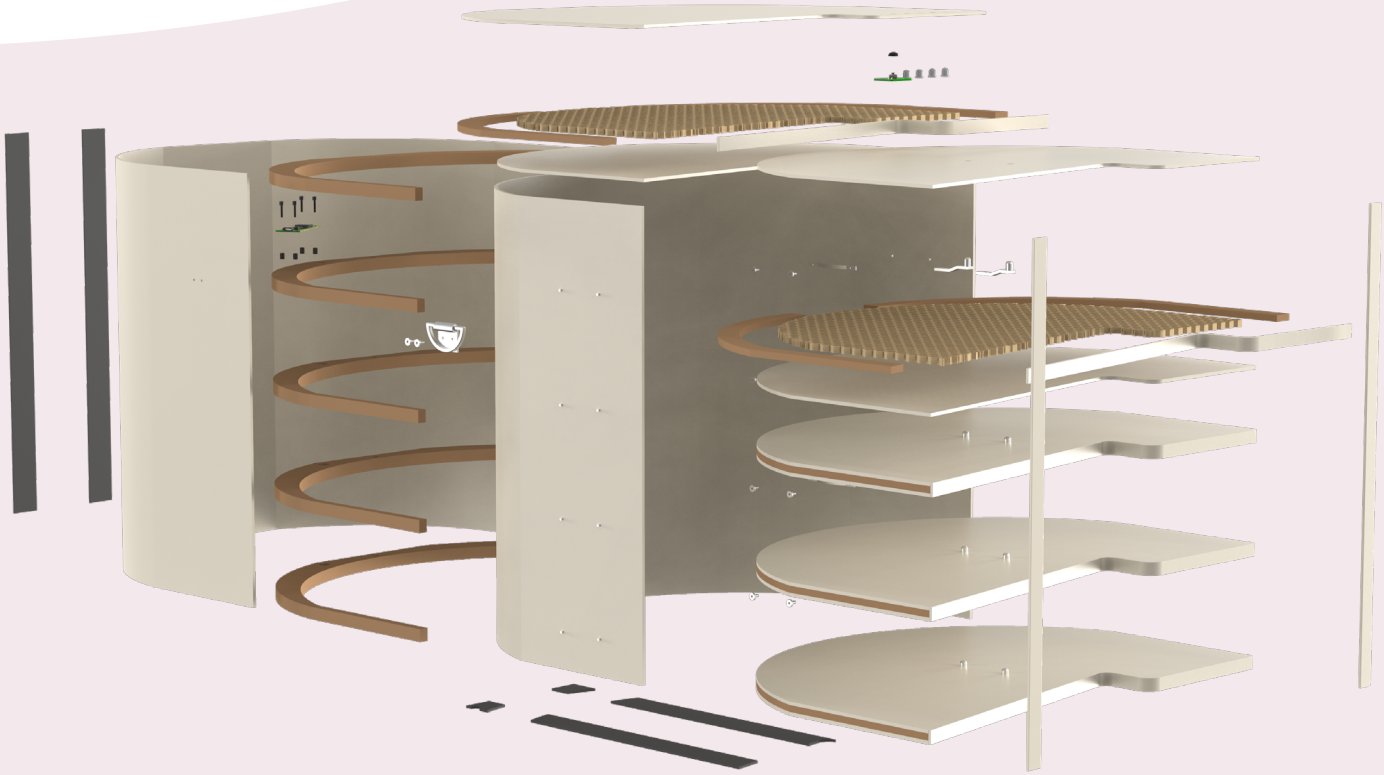

Scalability for Future Possibilities

Future possibilities for scaling the Wobble experience are almost endless because Wobble offers software as a service. This creates expanded market potential, reaching new customer segments as it can be altered to suit specific needs. Scaling could include professional use cases aimed at physiotherapist clinics or expanding the existing software to fit a broader range of age groups.

The Wobble system has great potential for scaling beyond Danish borders and into the European market.
Naturally, DMCD is an illness that occurs not only in Denmark but everywhere in the world. Currently, there is no prospect of a decline in new cases of children with DMCD yearly, indicating a consistent need for a solution.





AALBORG
UNIVERSITY

STUDENT REPORT

Remember to Wobble through
your trouble!

Wobble

through your trouble!

Technical drawings

Aalborg University
May 2024

MA4-ID8

Kristian Faarup Hermansen
Line Brandt Hansen
Philip Greth Faurschou

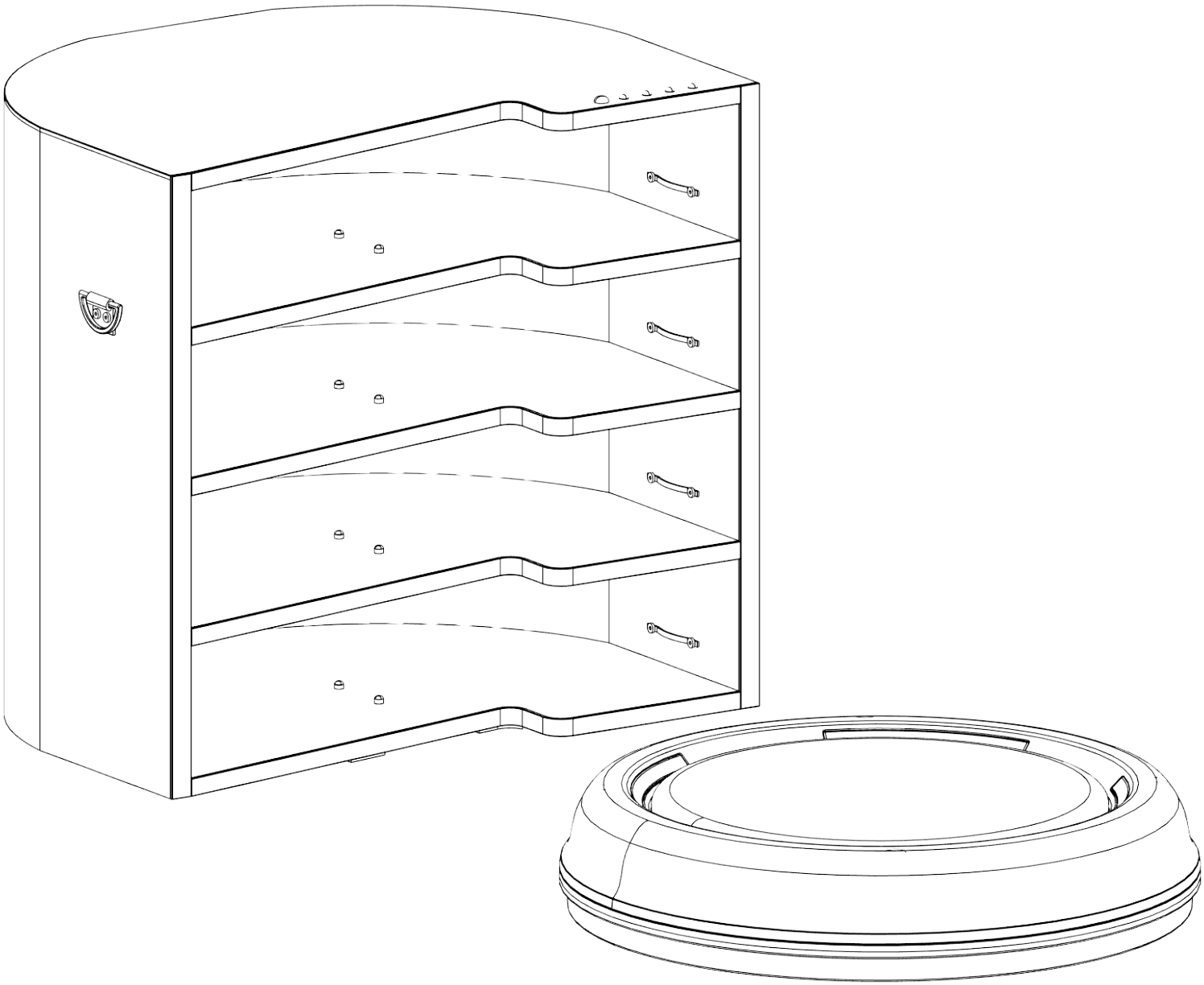

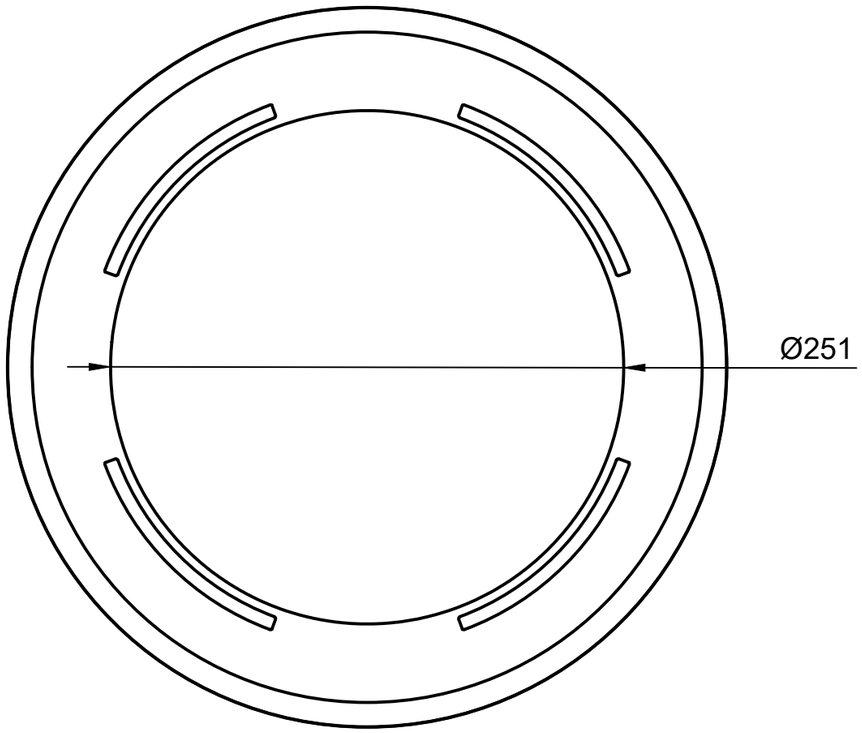

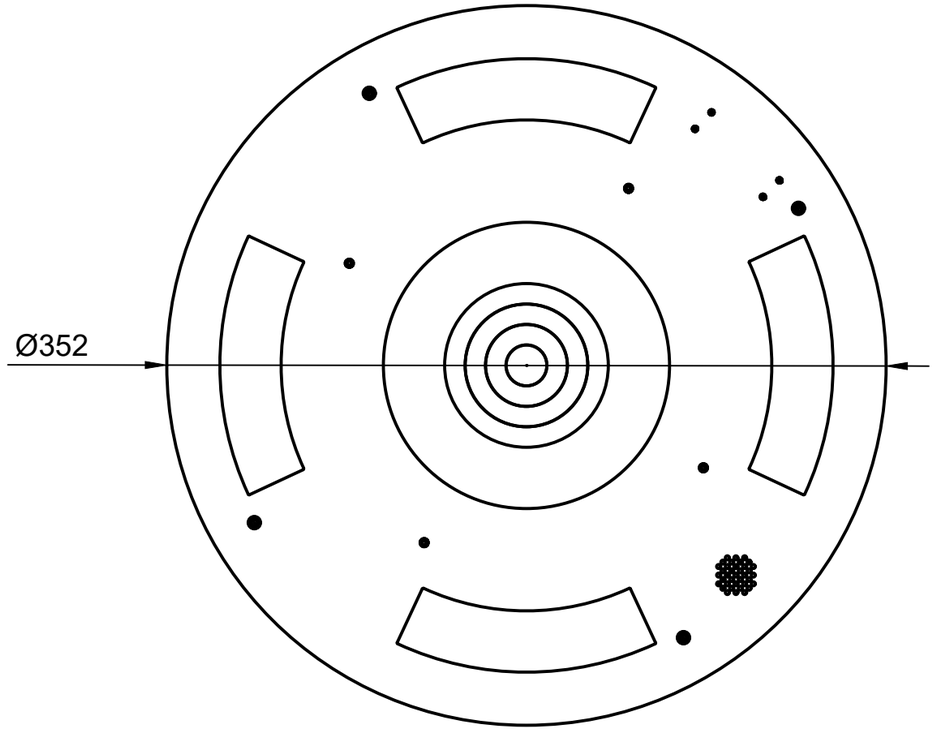

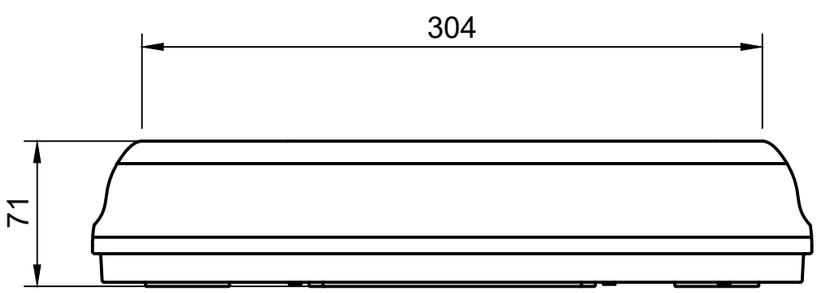

Dept. Industrial Design	Part No.	Created by MA4-ID8 19-05-2023	Project Wobble
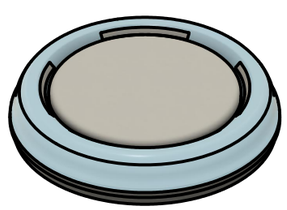		Document type Main drawing	Production Injection moulding, cut, laser cut
		Title Wobble Pad	Materials PC/ABS, PUR, CR, Alu
			Tolerances
			Scale 1:3 / A3 / Sheet 1

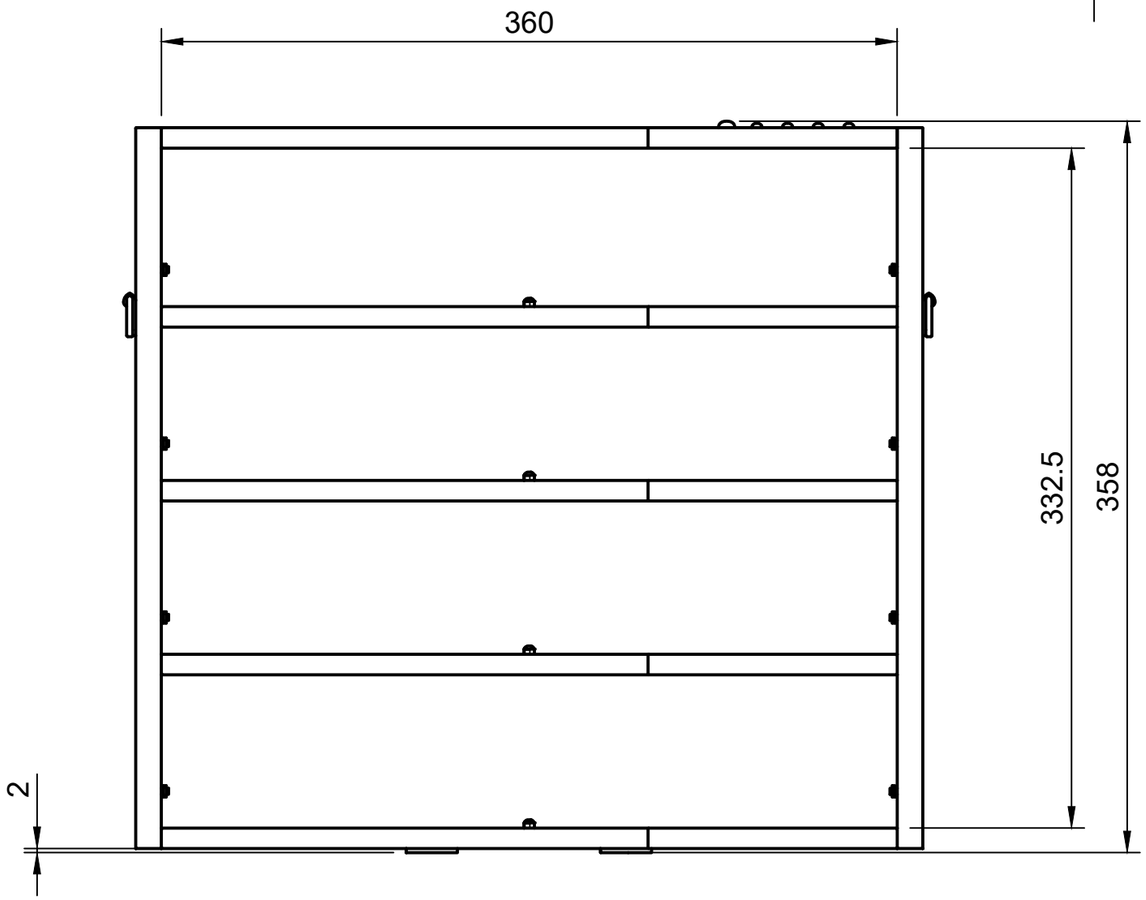

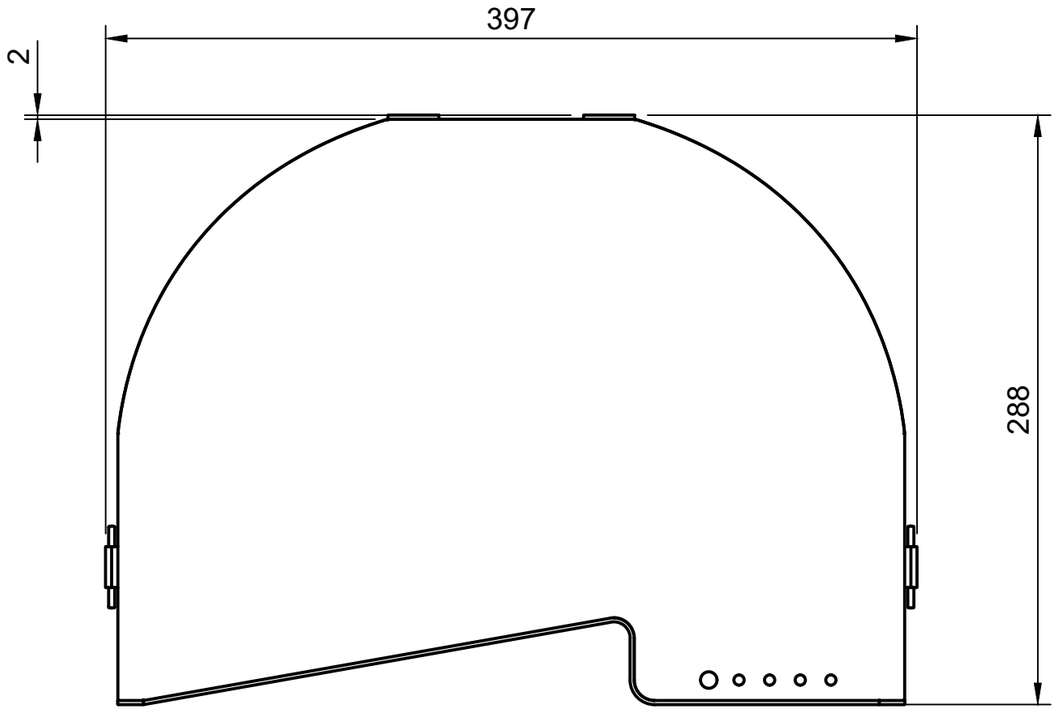

Dept. Industrial Design	Part No.	Created by MA4-ID8 19-05-2023	Project Wobble
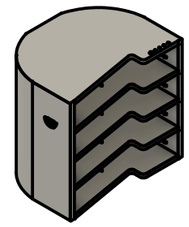		Document type Main drawing	Production Laser cut, cut
		Title Wobble Dock	Materials MDF, Honeycomb paper, fiber boards, steel
			Tolerances
			Scale 1:3 / A3 / Sheet 2

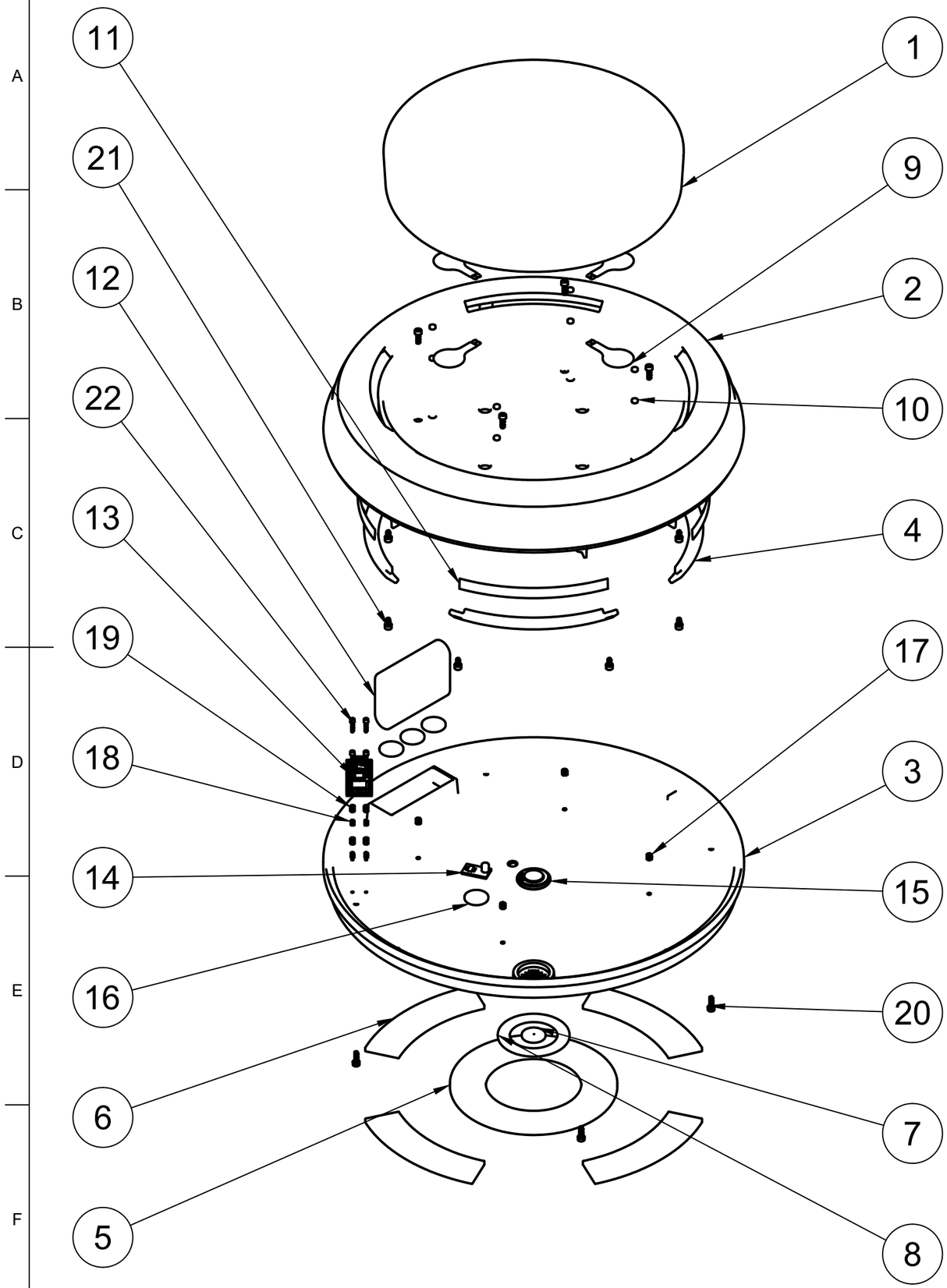

Parts List			
Item	Qty	Description	Material and production
1	1	Cushion	PUR foam, cut
2	1	Outer shell	PC/ABS, injection moulded
3	1	Bottom plate	PC/ABS, Injection moulded
4	4	Light guide	PC, Injection moulded
5	1	Inner foot	Neoprene, cut
6	4	Outer foot	Neoprene, cut
7	1	Inner charging point	Aluminium, laser cut
8	1	Outer charging point	Aluminium, laser cut
9	4	Flexible piezoresistive sensor	Standard component
10	8	Magnet	Standard component
11	4	LED strip	Standard component
12	1	Battery	Standard component
13	1	Raspberry Pi Pico W	Standard component
14	1	Mini audio power amplifier	Standard component
15	1	Mini speaker	Standard component
16	4	Sticky foam pad	Standard component
17	4	Brass insert M3 x 4 mm	Standard component
18	4	Brass insert M2 x 4 mm	Standard component
19	4	Standoff M2 x 5 mm	Standard component
20	8	Screw M3 x 10 mm	Standard component
21	8	Screw M3 x 6 mm	Standard component
22	4	Screw M2 x 10 mm	Standard component

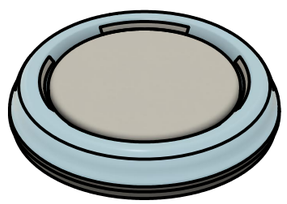

Dept.
Industrial Design

Part No.

Created by
MA4-ID8 19-05-2023

Project
Wobble

Document type
Exploded view

Production

Title
Wobble Pad

Materials

Tolerances

Scale
1:4

A3

Sheet
3

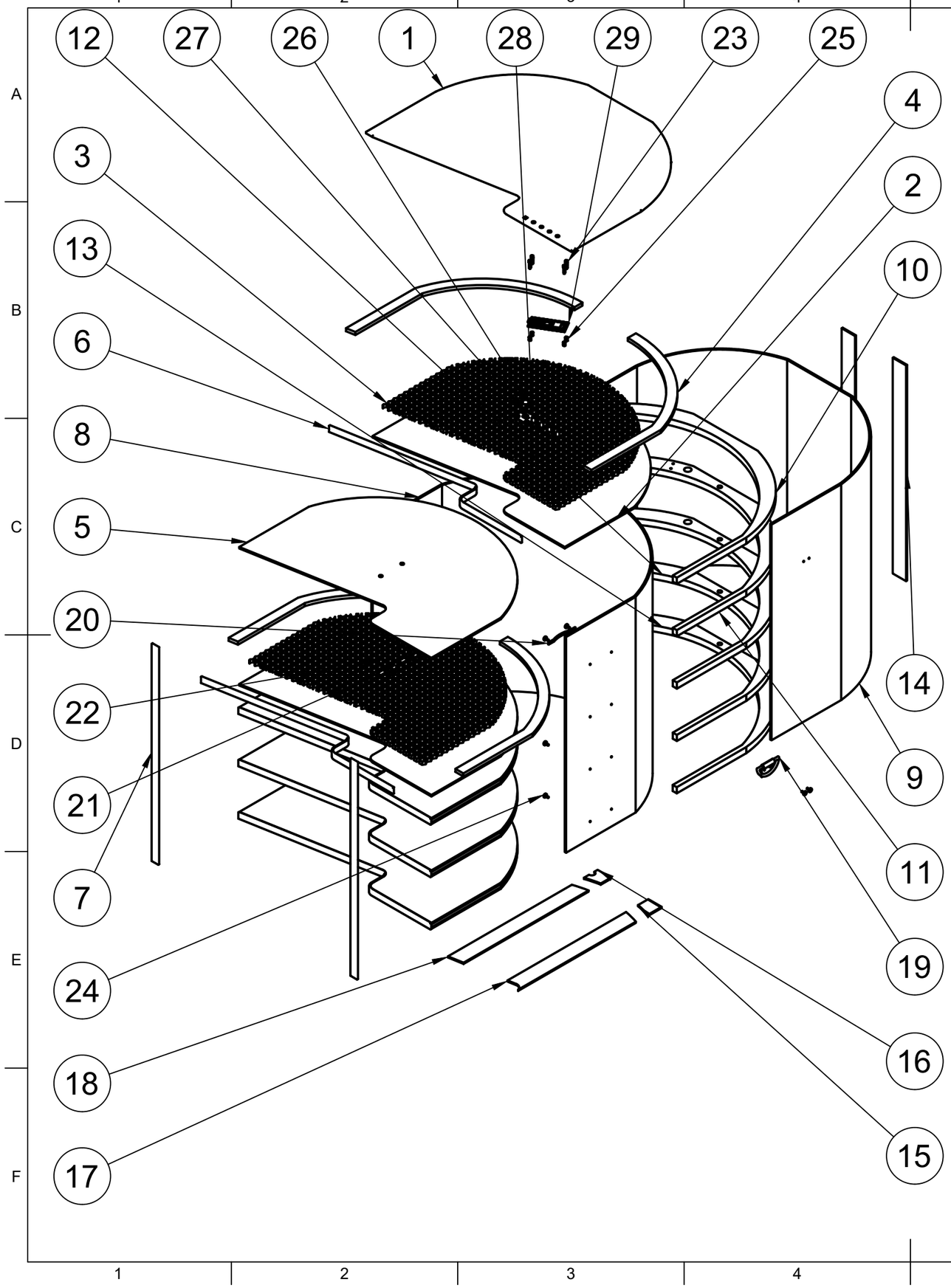

Parts List

Item	Qty	Description	Material and production
1	1	Top plate upper cover	Fiber board, laser cut
2	5	bottom cover	Fiber board, laser cut
3	5	Honneycomb infill	Honneycomb paper, laser cut
4	10	Shelf edge	MDF, laser cut
5	4	Shelf upper cover	Fiber board, laser cut
6	5	Edge band	Standard component
7	2	Edge band front	Standard component
8	1	Inner wall	Fiber board, Laser cut, bent
9	1	Outer wall	Fiber board, laser cut, bent
10	1	Top rib	MDF, laser cut
11	1	Upper middle rib	MDF, laser cut
12	2	Middle rib	MDF, laser cut
13	1	Bottom rib	MDF, laser cut
14	2	Back foot	Neoprene, cut
15	1	Rib foot right	Neoprene, cut
16	1	Rib foot left	Neoprene, cut
17	1	Center foot right	Neoprene cut
18	1	Center foot left	Neoprene cut
19	2	Handle	Steel, laser cut, bent
20	8	Leaf spring	Steel, laser cut, bent
21	4	Shelf spring	Steel, laser cut, bent
22	4	Contact point	Standard component
23	4	Screw M2 x 10 mm	Standard component
24	20	Screw M3 x 5 mm	Standard component
25	4	Standoff M2 x 5 mm	Standard component
26	1	Button cover	Standard component
27	1	Tactile switch	Standard component
28	4	Diode	Standard component
29	1	Raspberry Pi Pico W	Standard component

Dept. Industrial Design	Part No.	Created by MA4-ID8 19-05-2023	Project Wobble
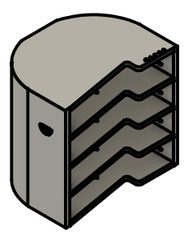		Document type Exploded view	Production
		Title **Wobble Dock**	Materials
			Tolerances
			Scale 1:6 / A3 / Sheet 4

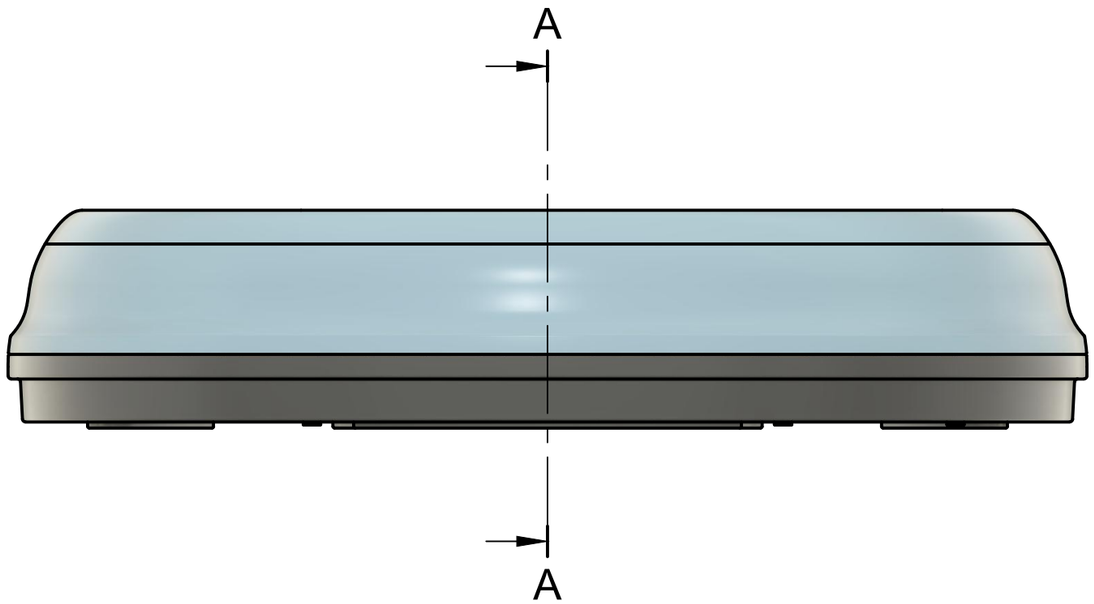

A-A (1:2)

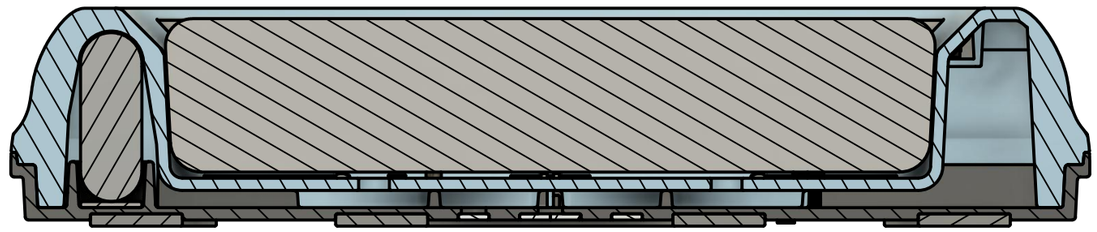

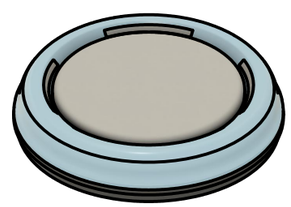

Dept. Industrial Design	Part No.	Created by MA4-ID8 19-05-2023	Project Wobble
		Document type Section view	Production
		Title Wobble Pad	Materials
			Tolerances
			Scale 1:2 / A3 / Sheet 5

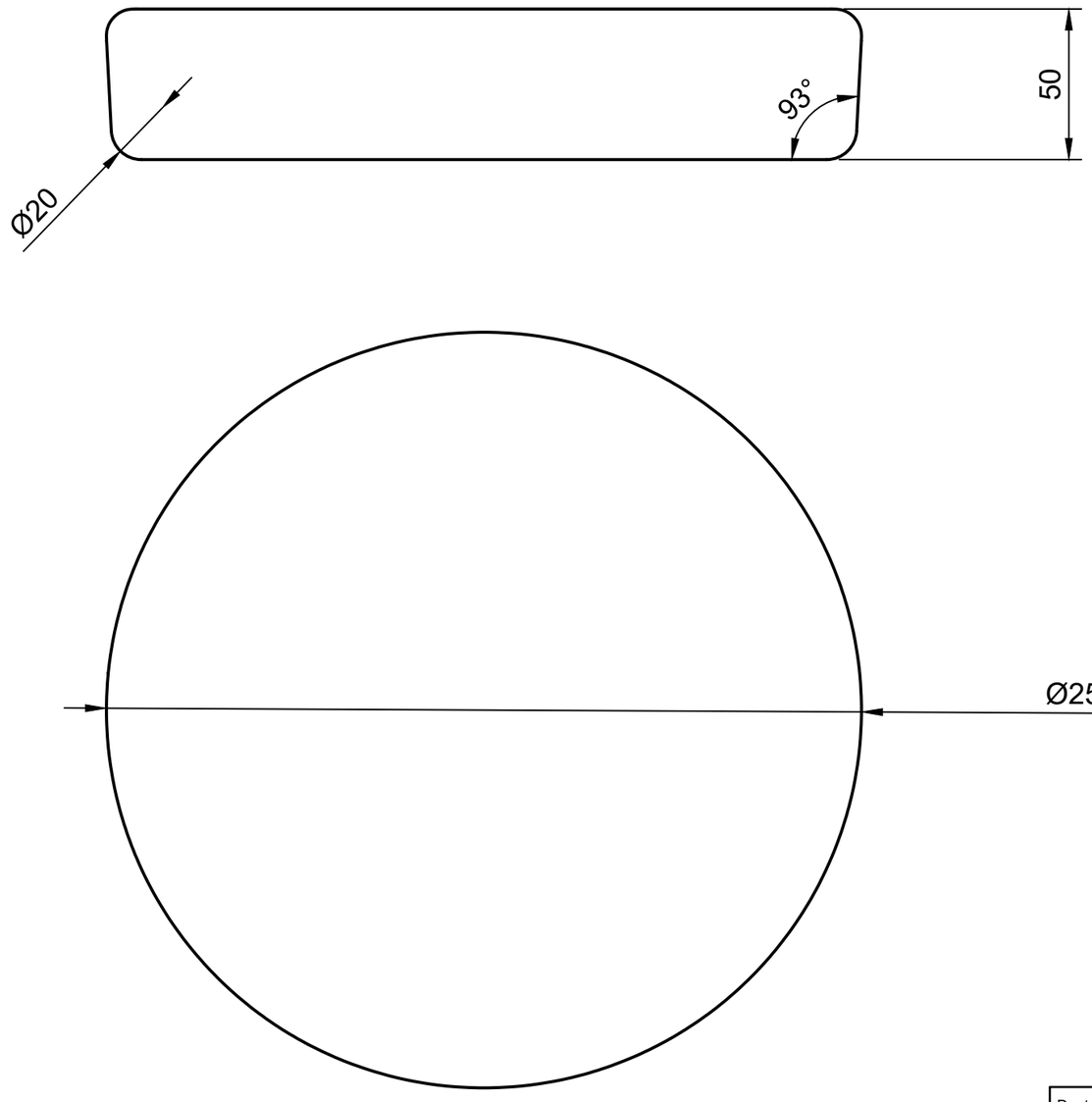

Dept. Industrial Design	Part No. 1	Created by MA4-ID8 19-05-2023	Project Wobble
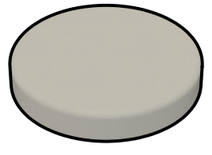		Document type Component	Production Cut
		Title Wobble Pad Cushion	Materials PUR
			Tolerances
			Scale 1:2 · A3 · Sheet 6

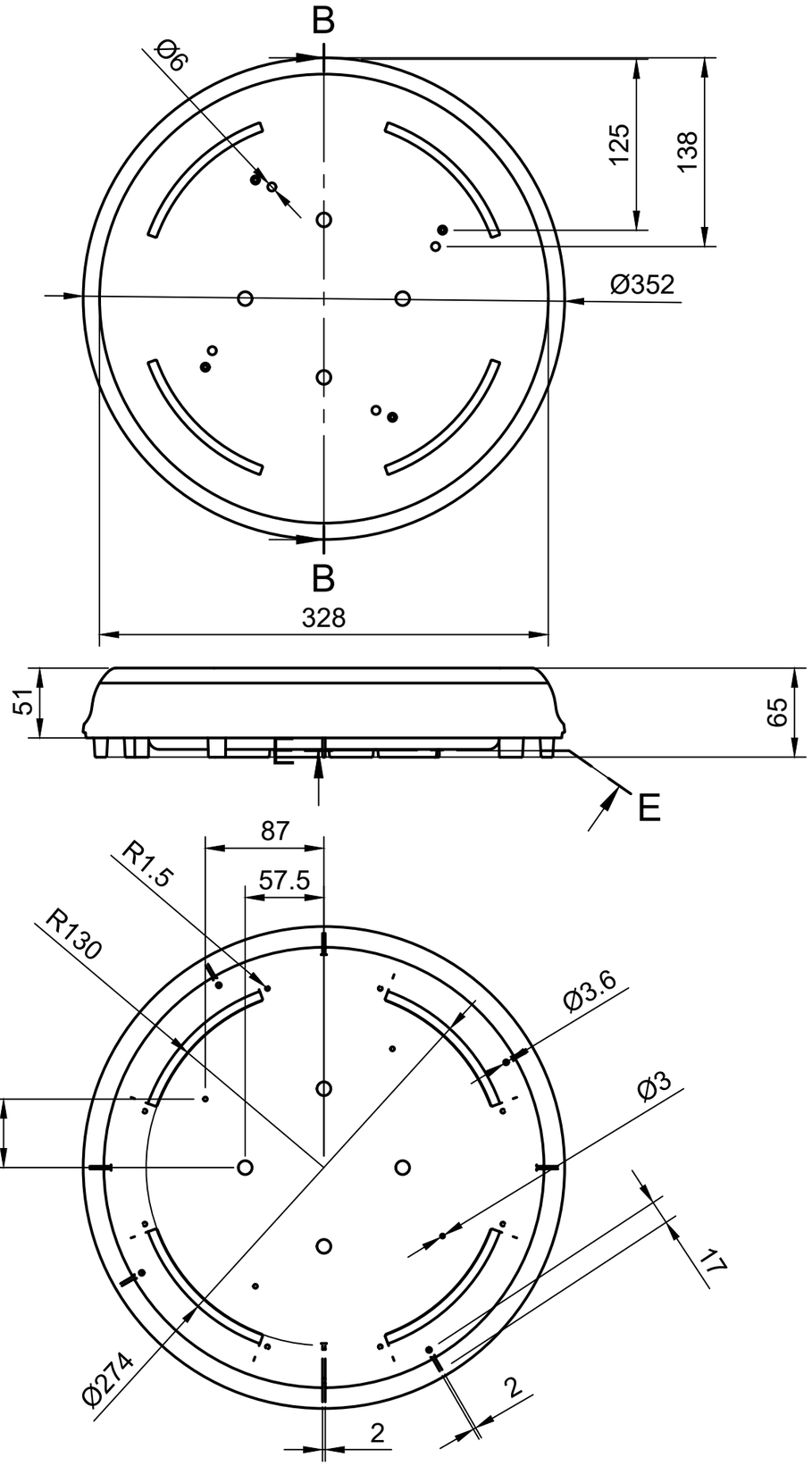

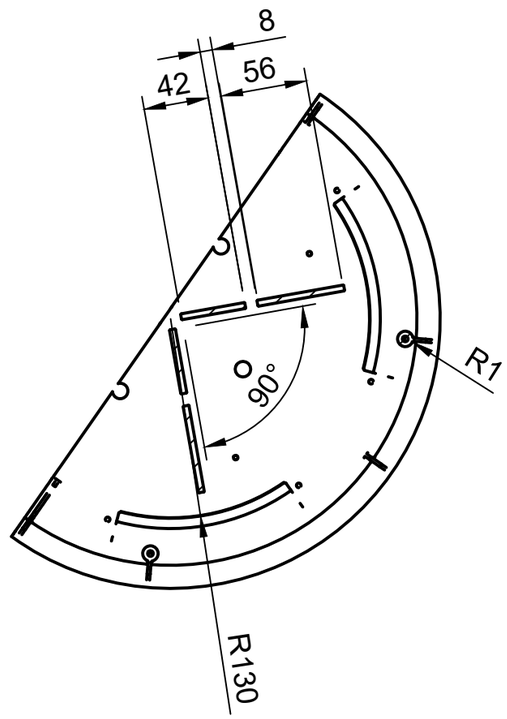

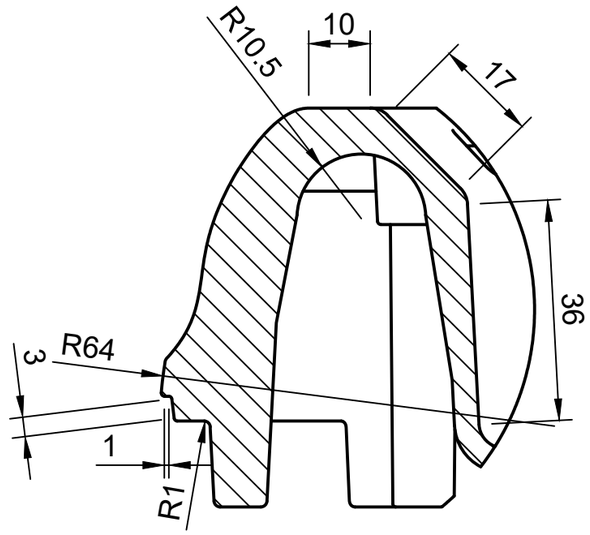

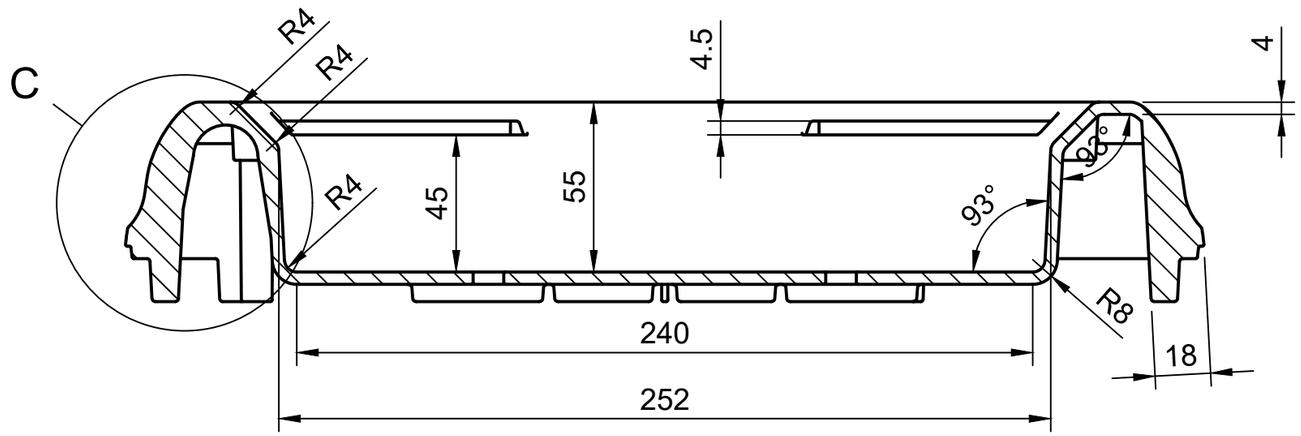

Dept. Industrial Design	Part No. 2	Created by MA4-ID8 19-05-2023	Project Wobble
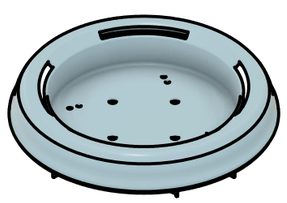		Document type Component	Production Injection moulding
		Title Wobble Pad Outer shell	Materials PC/ABS
			Tolerances ISO 2768-m -0,5
			Scale 1:4 / A3 / Sheet 7

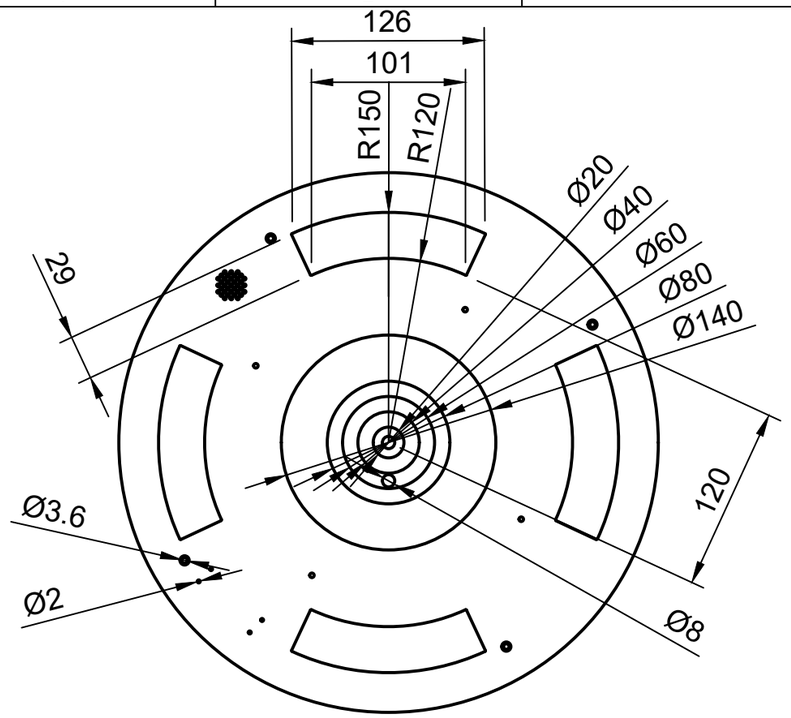

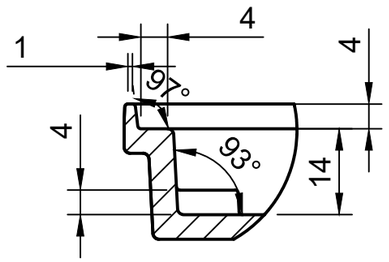

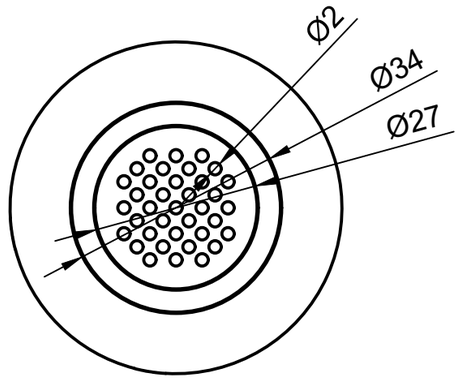

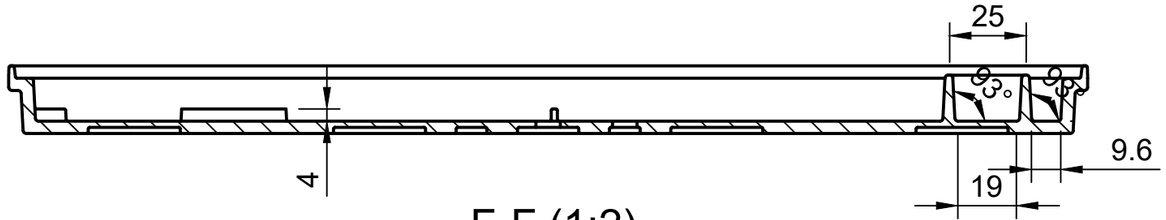

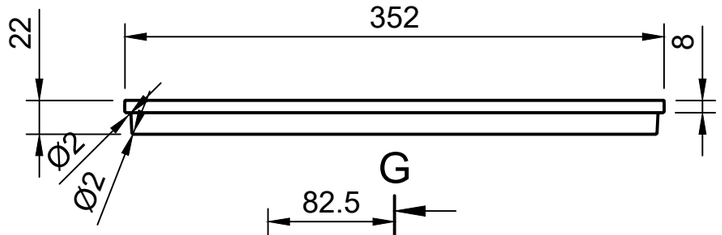

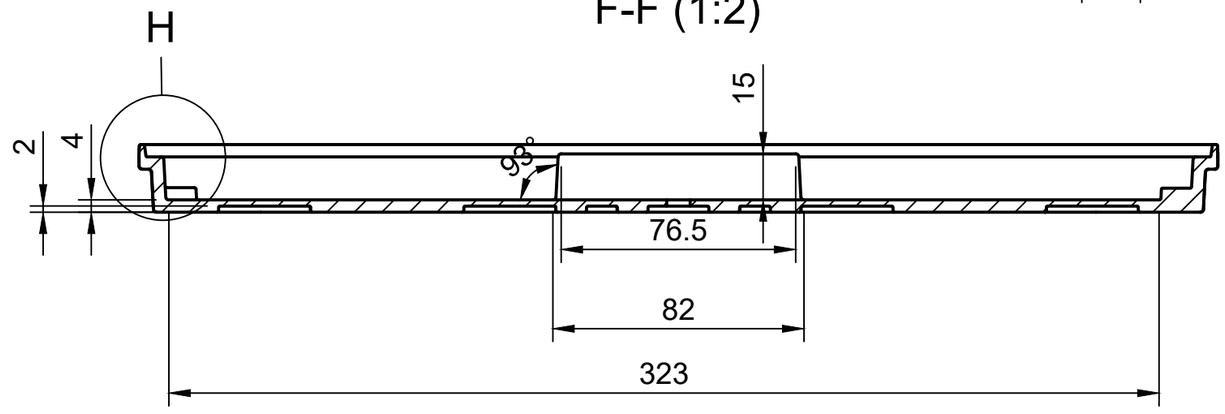

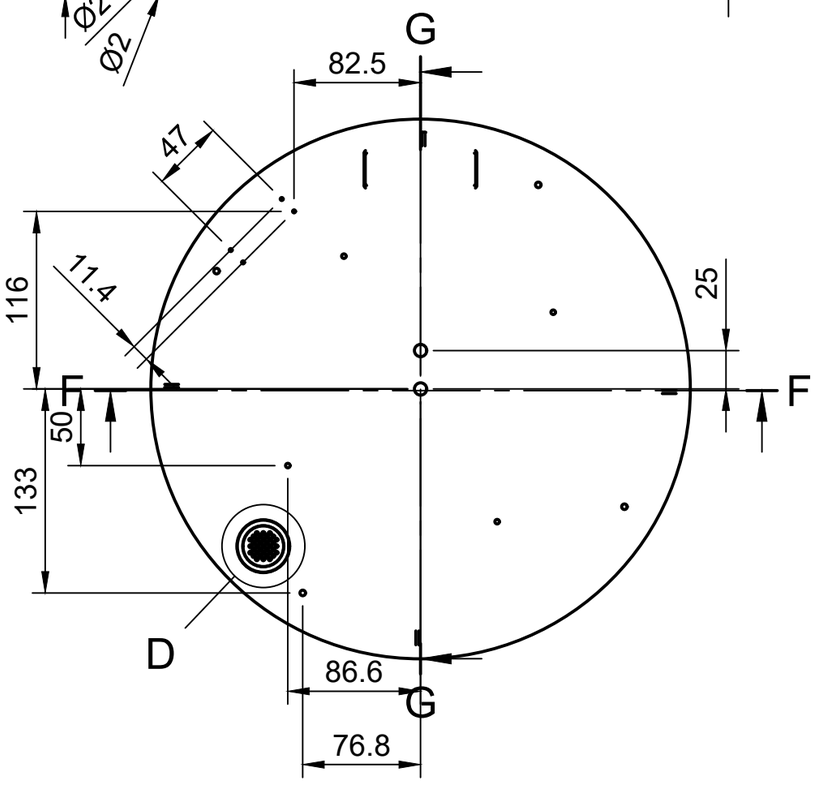

Dept. Industrial Design	Part No. 3	Created by MA4-ID8 19-05-2023	Project Wobble
		Document type Component	Production Injection moulding
		Title Wobble Pad Bottom plate	Materials PC/ABS
			Tolerances ISO 2768-m -0,5
			Scale 1:4 / A3 / Sheet 8

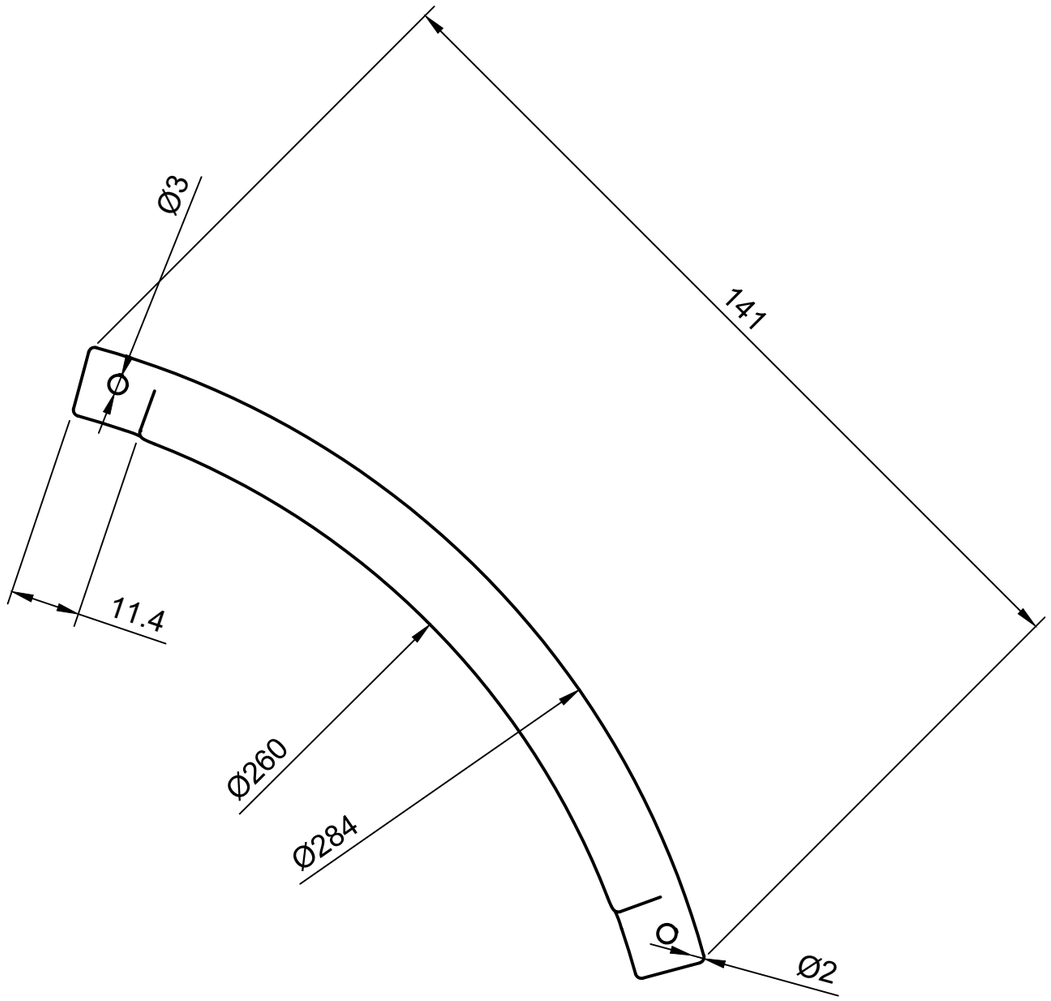

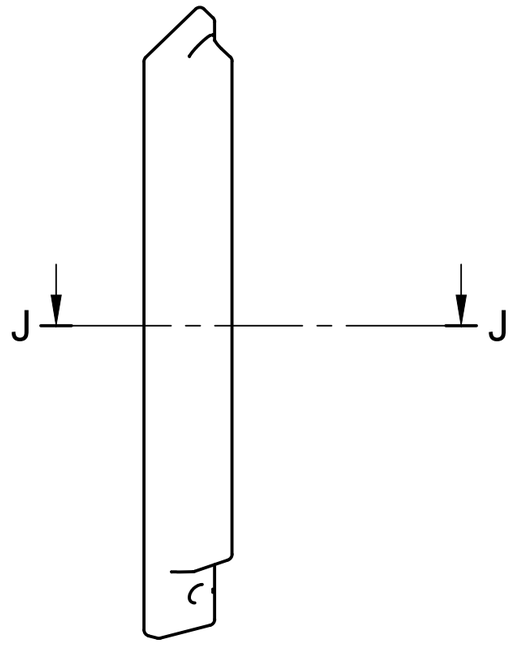

J-J (1:1)

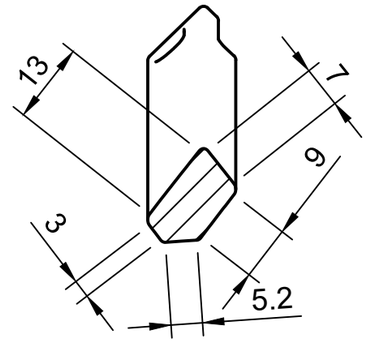

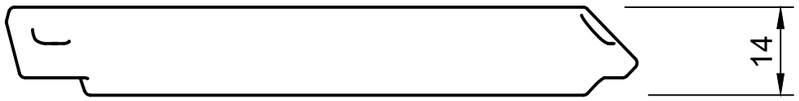

Dept. Industrial Design	Part No. 4	Created by MA4-ID8 19-05-2023	Project Wobble
		Document type Component	Production Injection moulding
		Title Wobble Pad Light guide	Materials PC
			Tolerances ISO 2768-m -0,5
			Scale 1:1 / A3 / Sheet 9

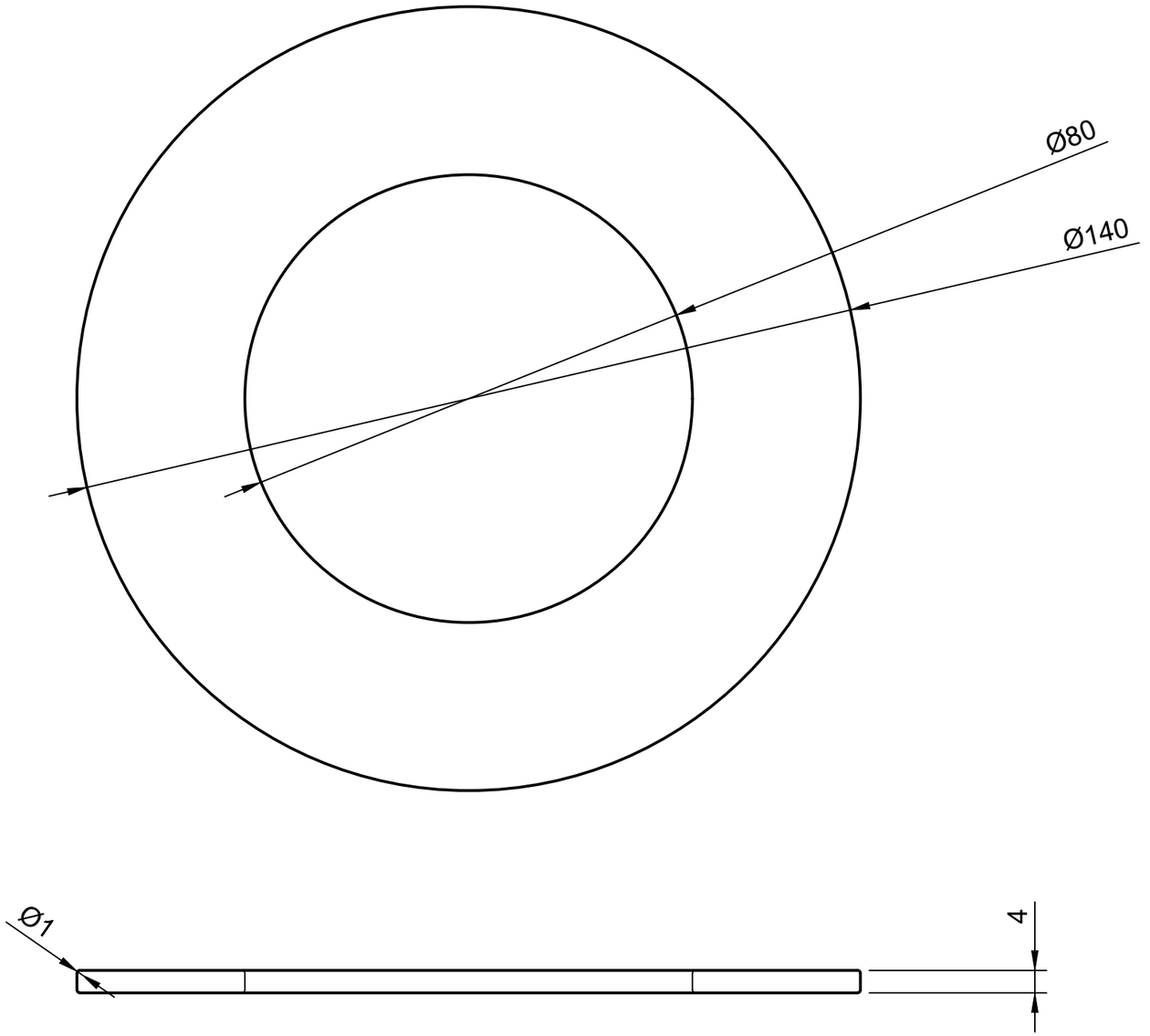

Dept. Industrial Design	Part No. 5	Created by MA4-ID8 19-05-2023	Project Wobble
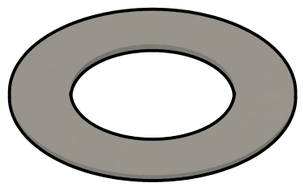		Document type Component	Production Cut
		Title Wobble Pad Inner foot	Materials Neoprene (CR)
			Tolerances ISO 2768-m -0,5
			Scale 1:1 / A3 / Sheet 10

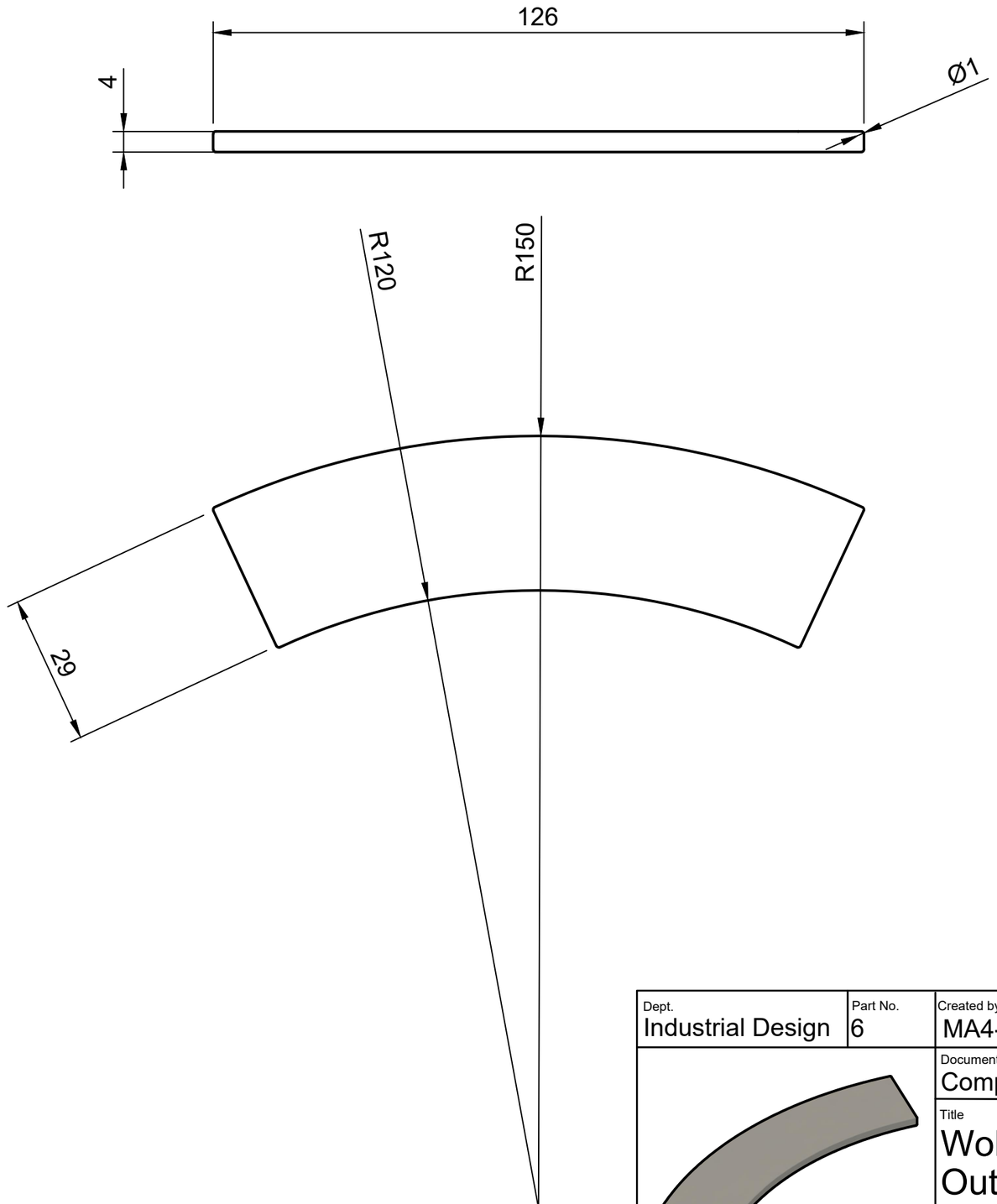

Dept. Industrial Design	Part No. 6	Created by MA4-ID8 19-05-2023	Project Wobble
		Document type Component	Production Cut
		Title Wobble Pad Outer foot	Materials Neoprene (CR)
			Tolerances ISO 2768-m -0,5
			Scale 1:1 / A3 / Sheet 11

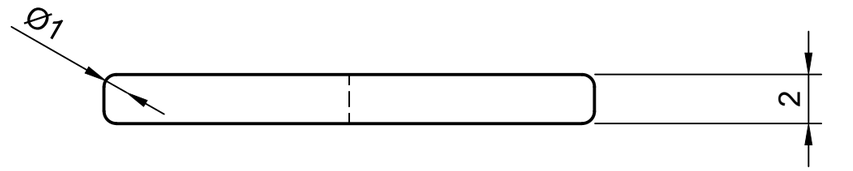

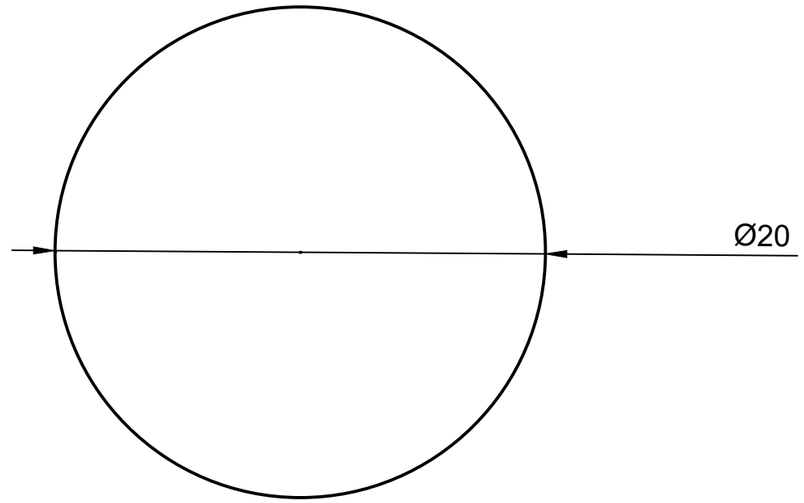

Dept. Industrial Design	Part No. 7	Created by MA4-ID8 19-05-2023	Project Wobble
		Document type Component	Production Laser cut
		Title Wobble Pad Inner charging point	Materials Aluminium (Alu)
			Tolerances ISO 2768-m -0,5
			Scale 4:1 / A3 / Sheet 12

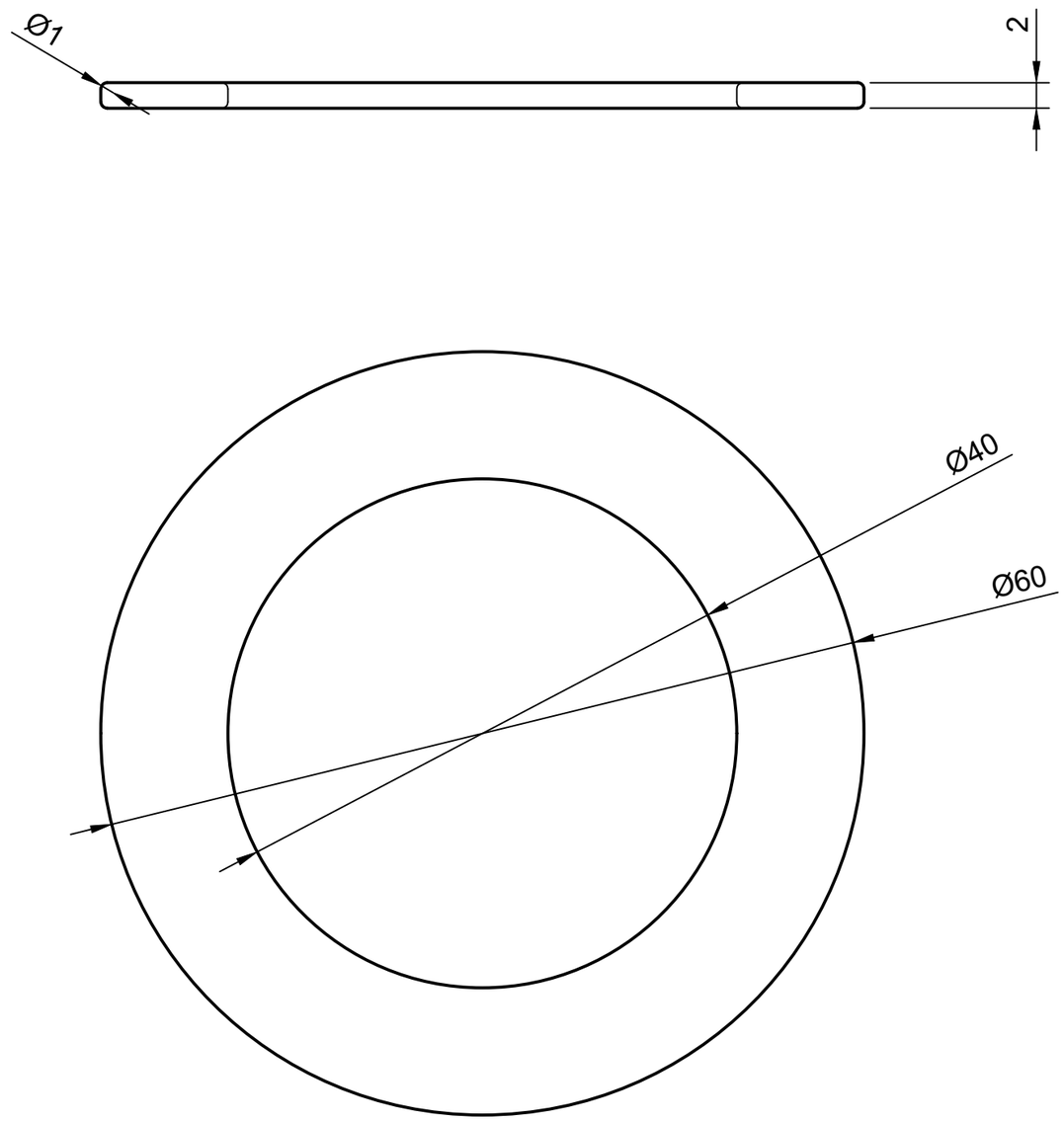

Dept. Industrial Design	Part No. 8	Created by MA4-ID8 19-05-2023	Project Wobble
		Document type Component	Production Laser cut
		Title Wobble Pad Outer charging point	Materials Aluminium (Alu)
			Tolerances ISO 2768-m -0,5
			Scale 2:1 / A3 / Sheet 13

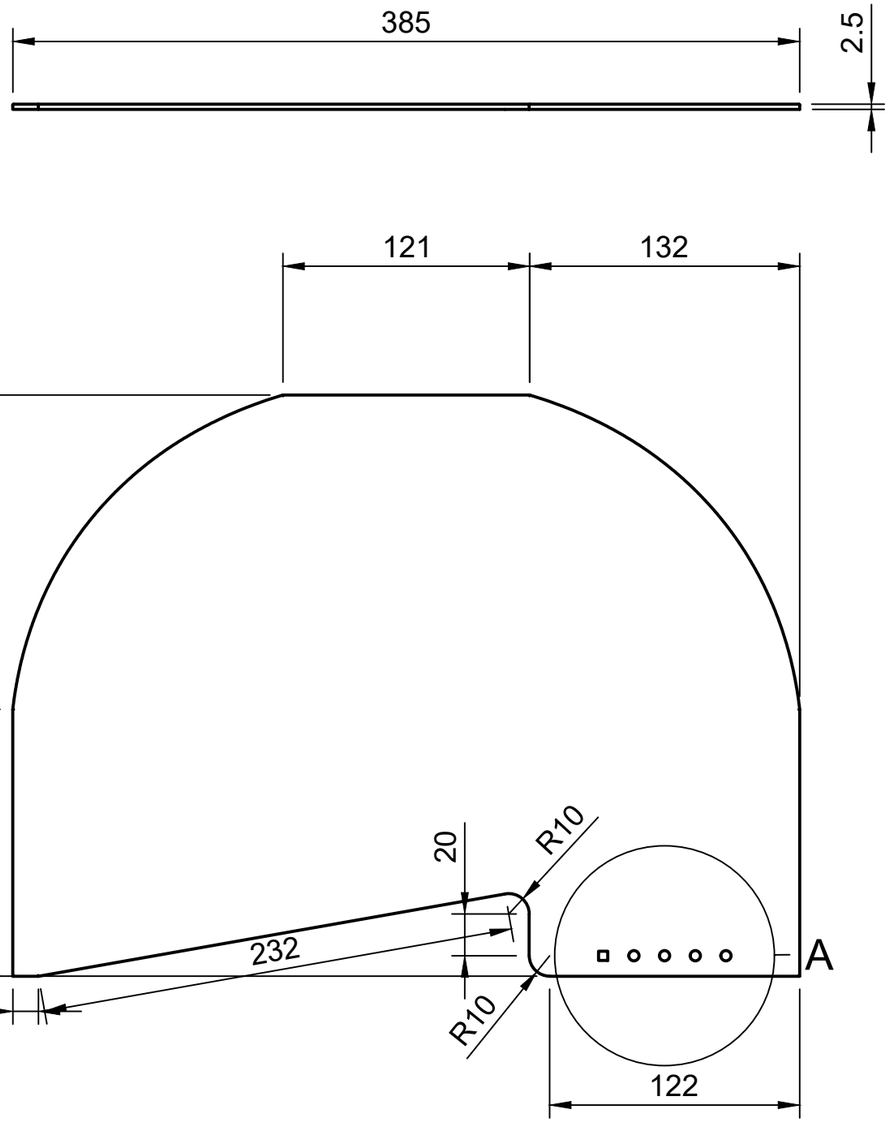

A (1:1)

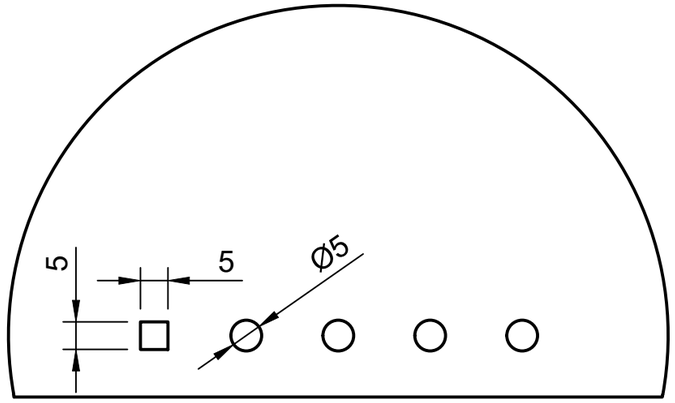

Dept. Industrial Design	Part No. 1	Created by MA4-ID8 19-05-2023	Project Wobble
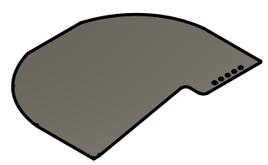		Document type Component	Production Laser cut
		Title Wobble Dock Top plate upper cover	Materials Fiber board
			Tolerances ISO 2768-m -0,5
			Scale 1:3 / A3 / Sheet 14

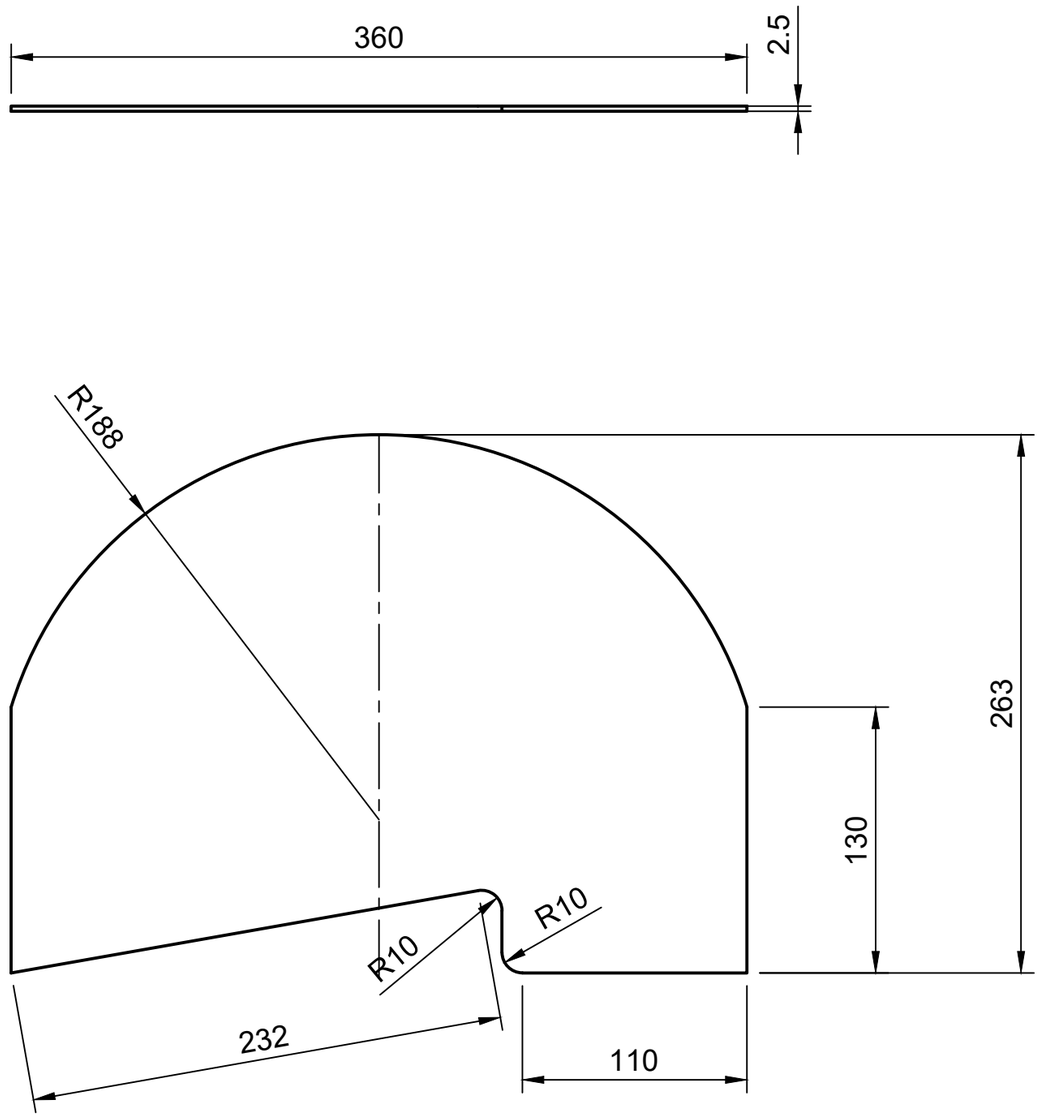

Dept. Industrial Design	Part No. 2	Created by MA4-ID8 19-05-2023	Project Wobble
		Document type Component	Production Laser cut
		Title Wobble Dock Bottom cover	Materials Fiber board
			Tolerances ISO 2768-m -0,5
			Scale 1:3 / A3 / Sheet 15

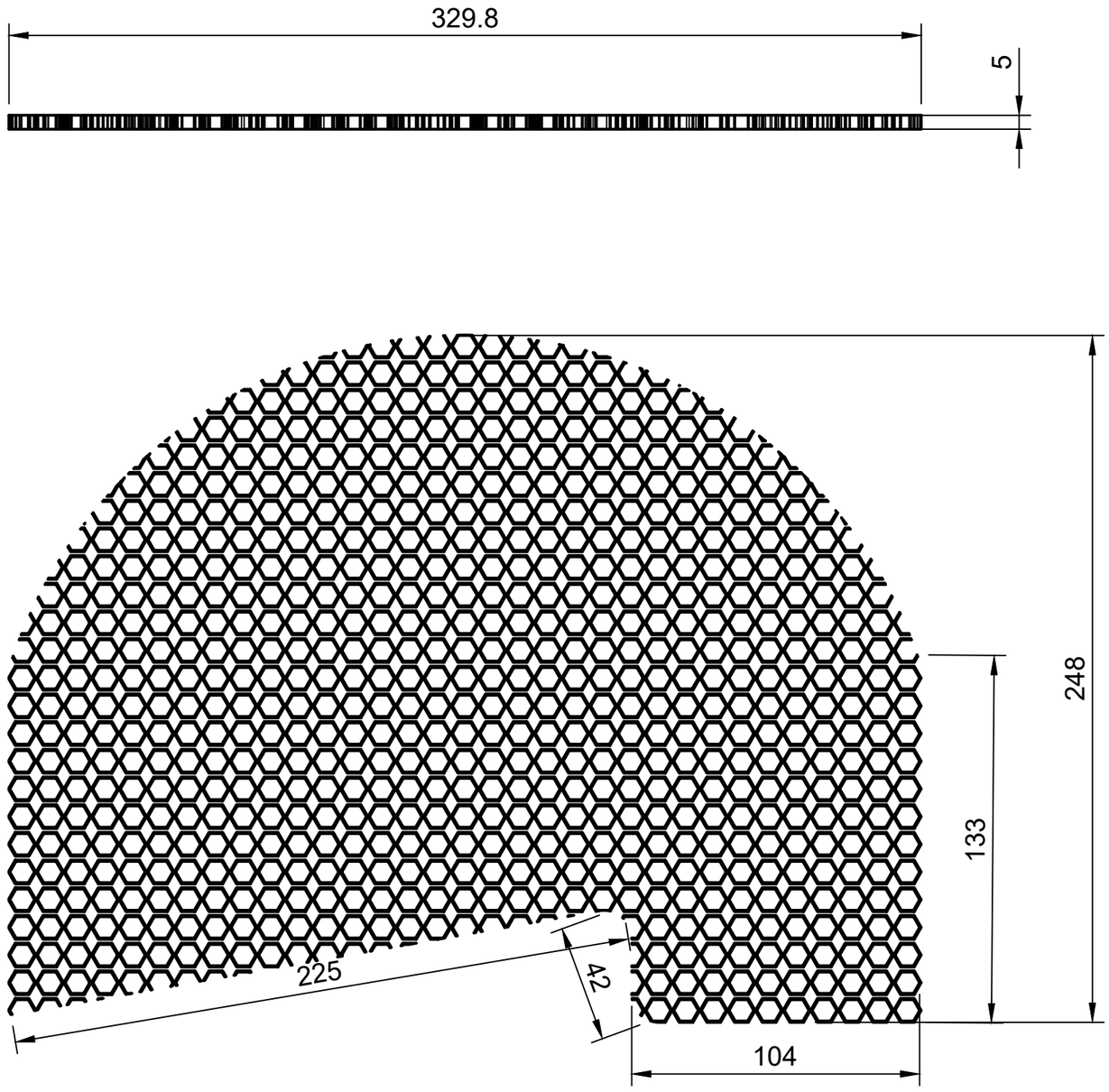

Dept. Industrial Design	Part No. 3	Created by MA4-ID8 19-05-2023	Project Wobble
		Document type Component	Production Laser cut
		Title Wobble Dock Honeycomb infill	Materials Honeycomb paper
			Tolerances ISO 2768-m -0,5
			Scale 1:2 / A3 / Sheet 16

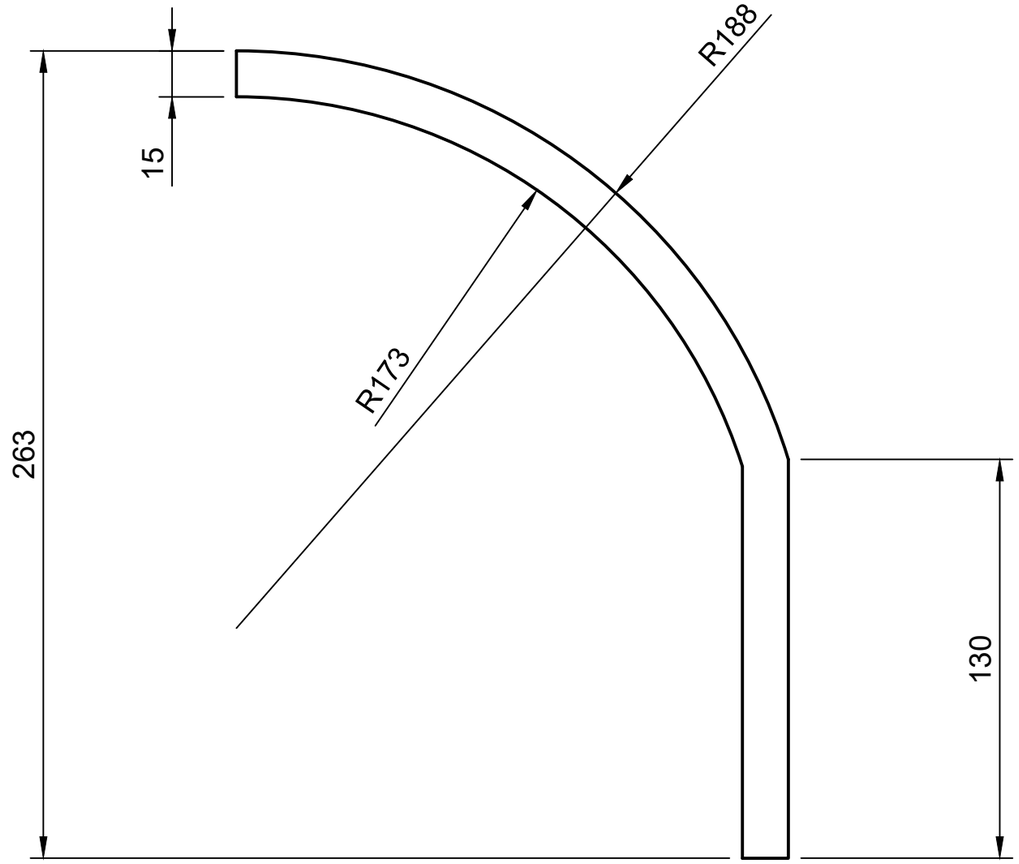

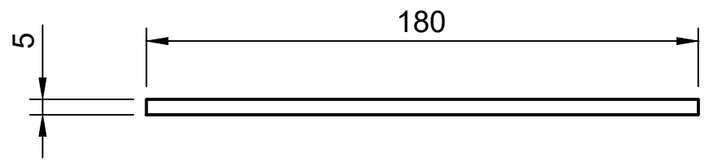

Dept. Industrial Design	Part No. 4	Created by MA4-ID8 19-05-2023	Project Wobble
		Document type Component	Production Laser cut
		Title Wobble Dock Shelf edge	Materials MDF
			Tolerances ISO 2768-m -0,5
			Scale 1:2 / A3 / Sheet 17

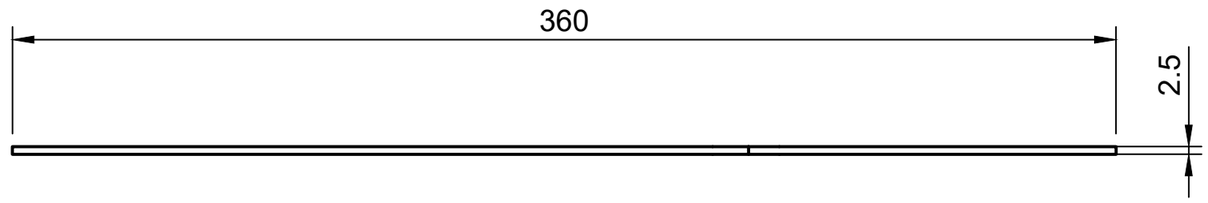

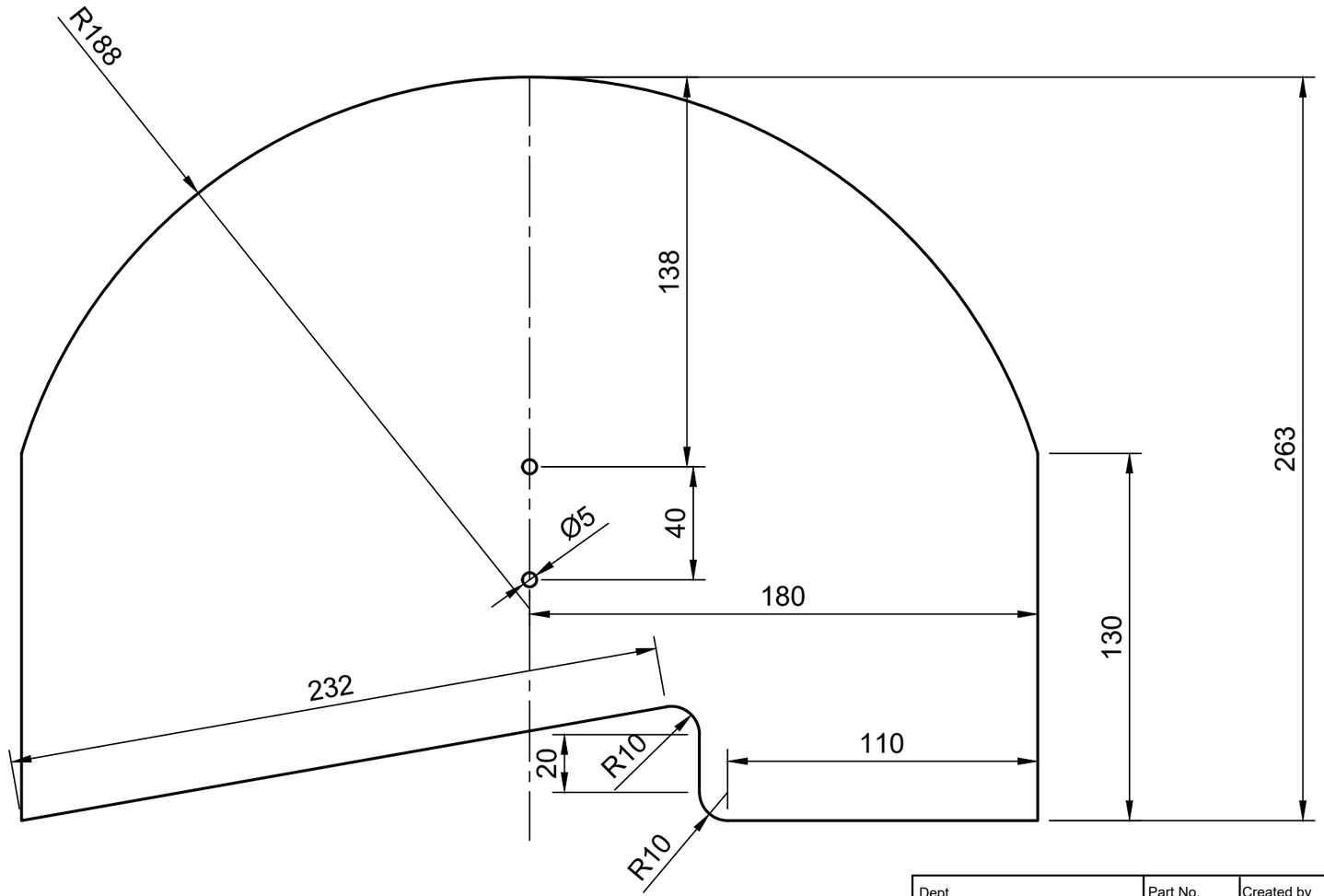

Dept. Industrial Design	Part No. 5	Created by MA4-ID8 19-05-2023	Project Wobble
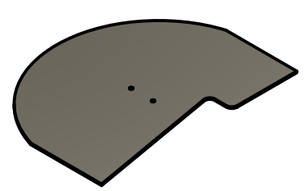		Document type Component	Production Laser cut
		Title Wobble Dock Shelf upper cover	Materials Fiber board
			Tolerances ISO 2768-m -0,5
			Scale 1:2 / A3 / Sheet 18

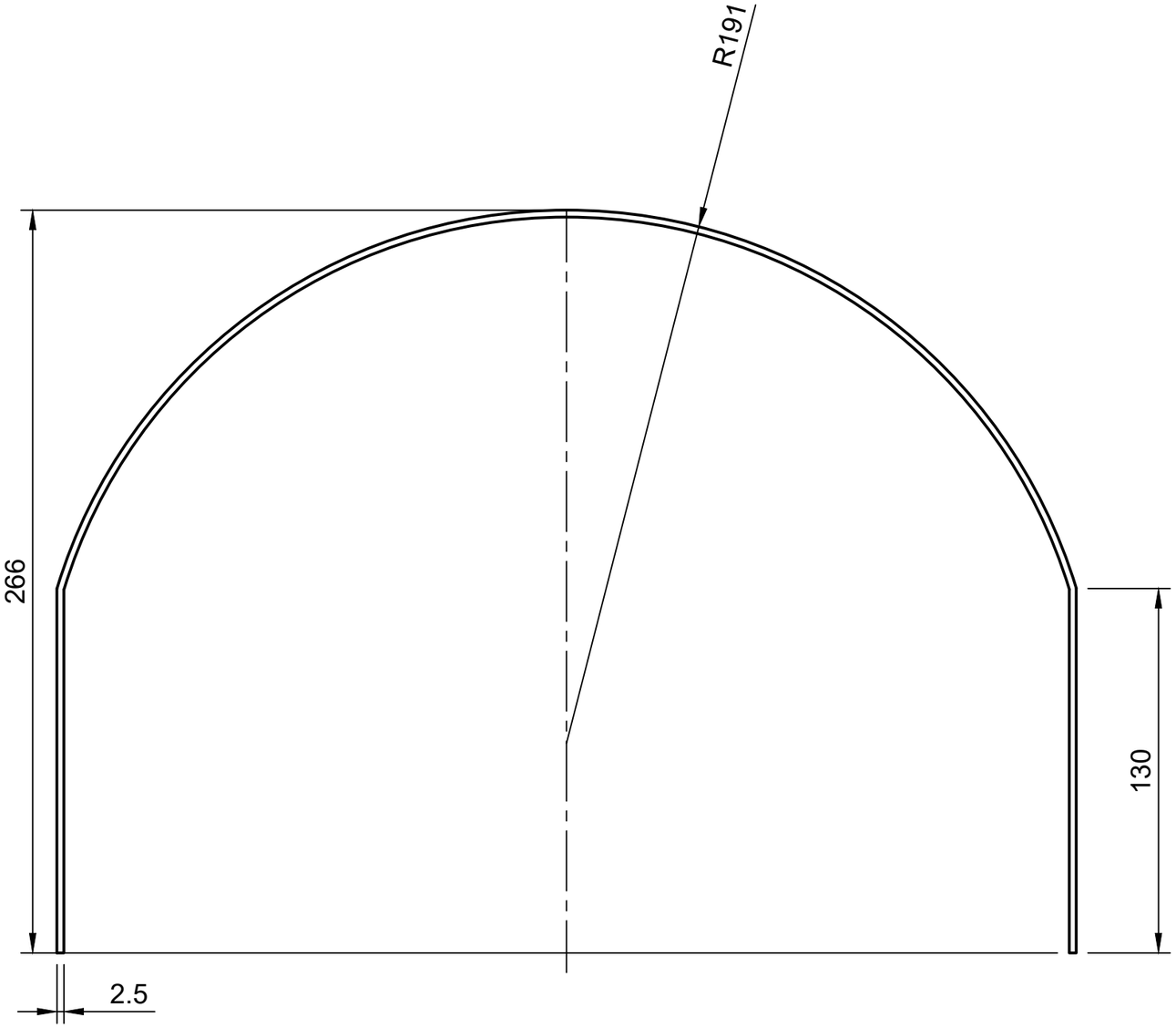

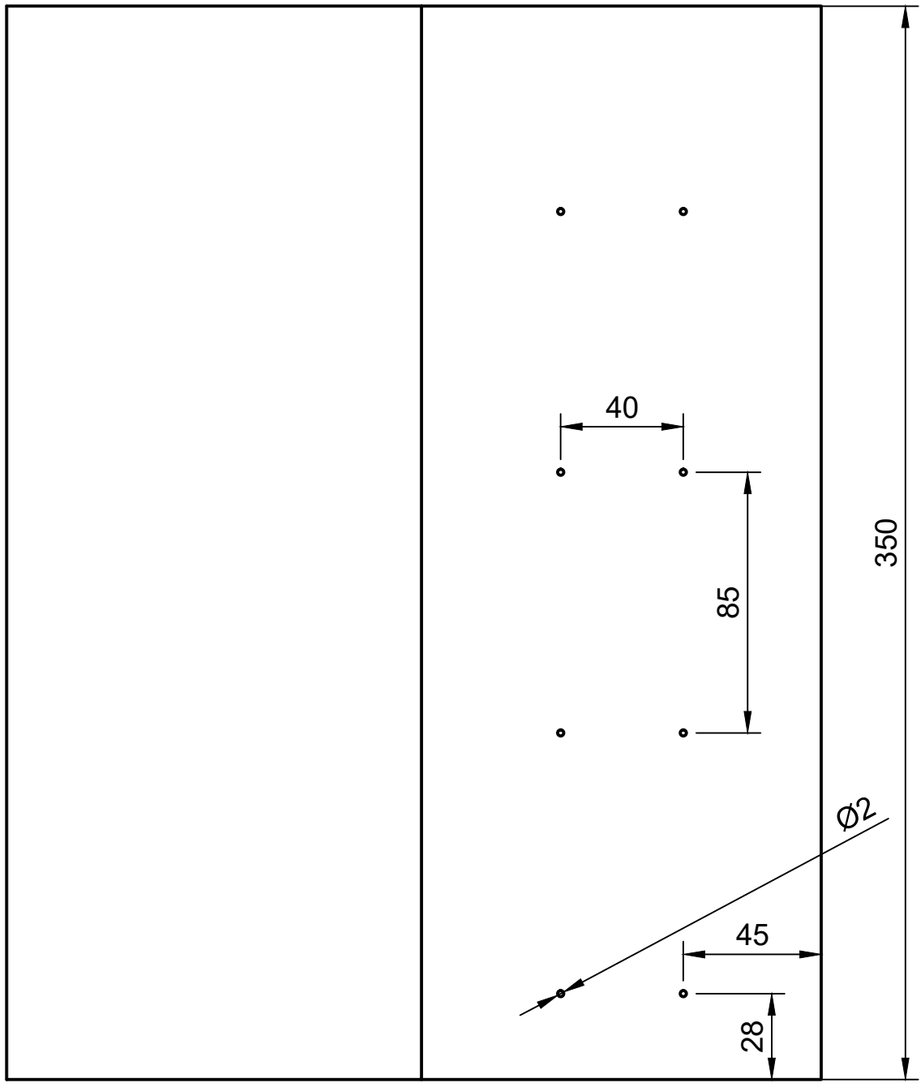

Dept. Industrial Design	Part No. 8	Created by MA4-ID8 19-05-2023	Project Wobble
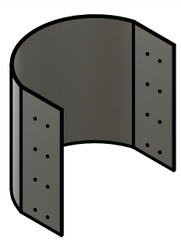		Document type Component	Production Laser cut, bent
		Title Wobble Dock Inner wall	Materials Fiber board
			Tolerances ISO 2768-m -0,5
			Scale 1:2 / A3 / Sheet 19

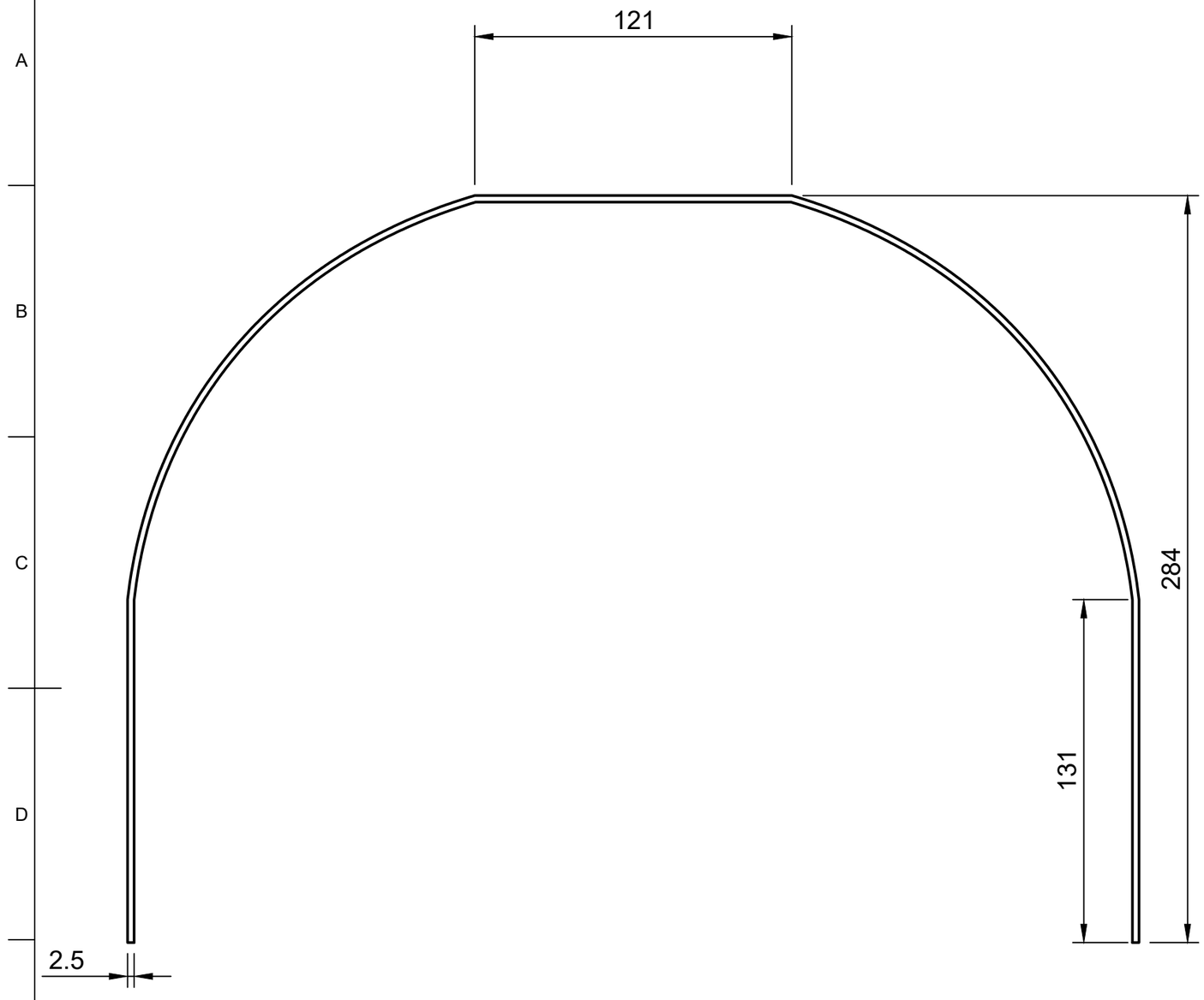

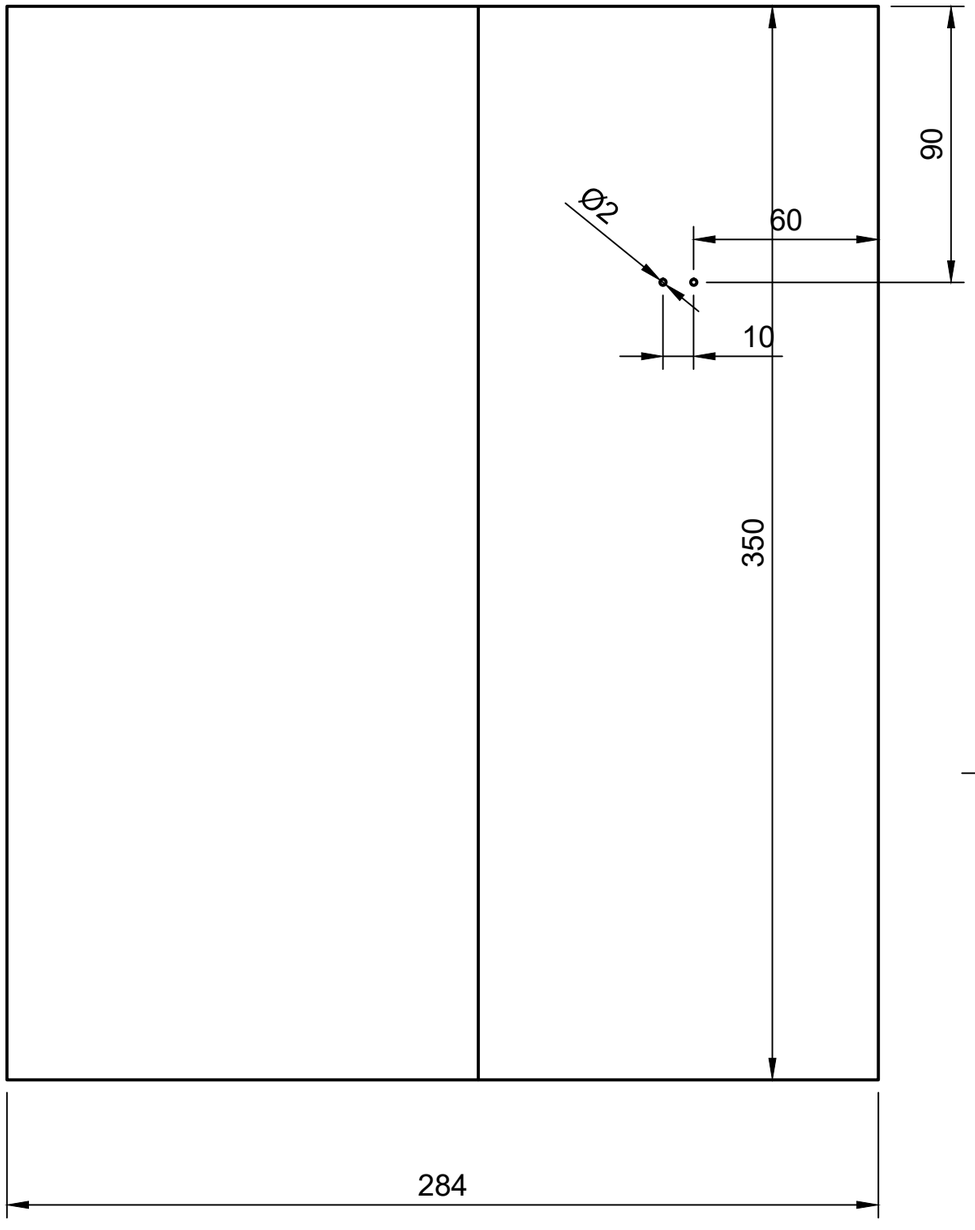

Dept. Industrial Design	Part No. 9	Created by MA4-ID8 19-05-2023	Project Wobble
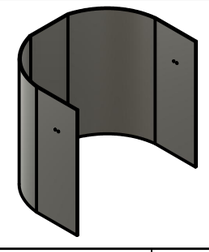		Document type Component	Production Laser cut, bent
		Title Wobble Dock Outer wall	Materials Fiber board
			Tolerances ISO 2768-m -0,5
			Scale 1:2 / A3 / Sheet 20

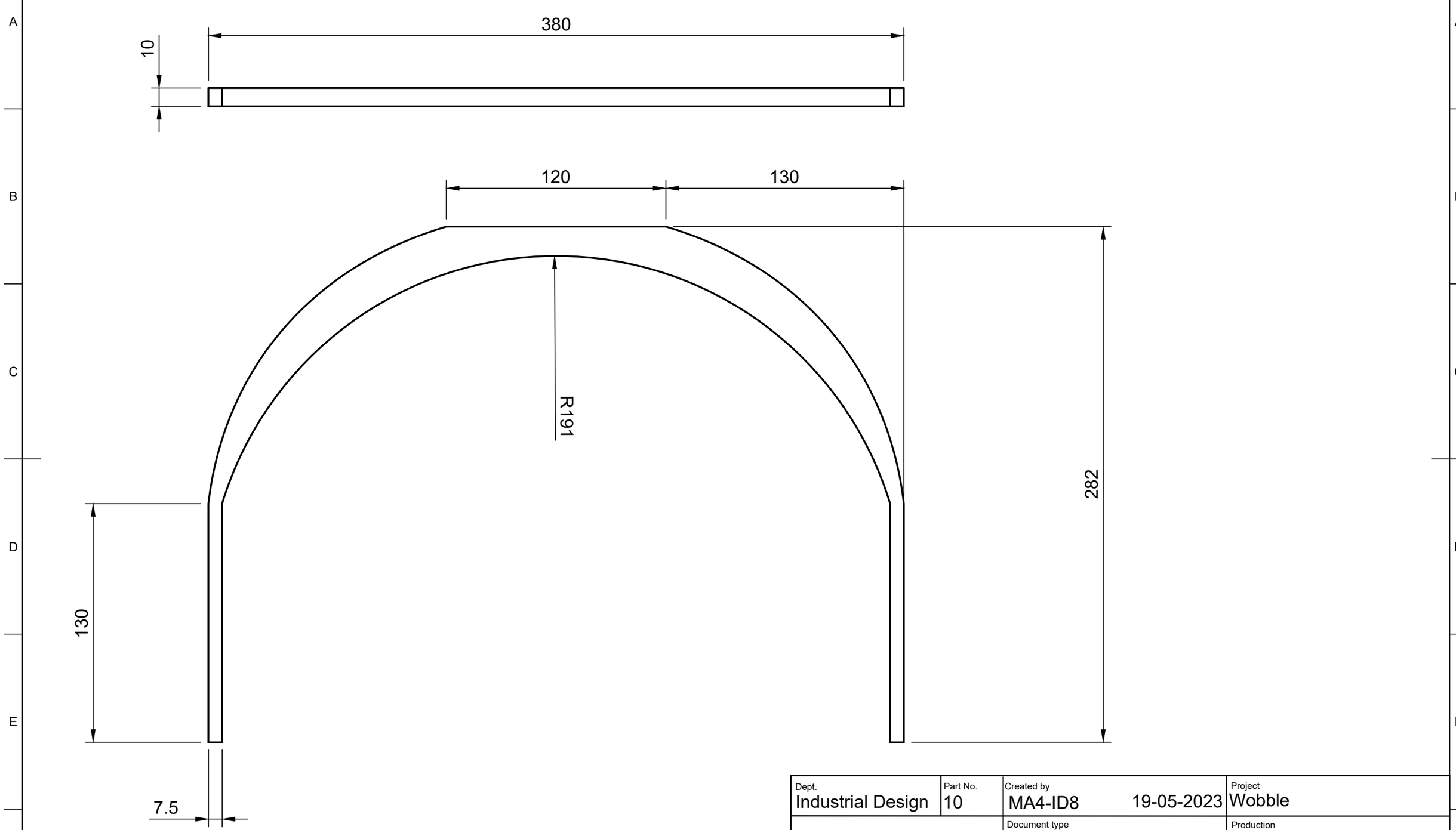

Dept. Industrial Design	Part No. 10	Created by MA4-ID8 19-05-2023	Project Wobble
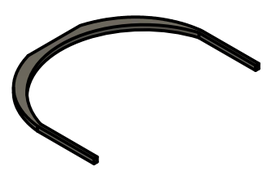		Document type Component	Production Laser cut
		Title Wobble Dock Top rib	Materials MDF
			Tolerances ISO 2768-m -0,5
			Scale 1:2 / A3 / Sheet 21

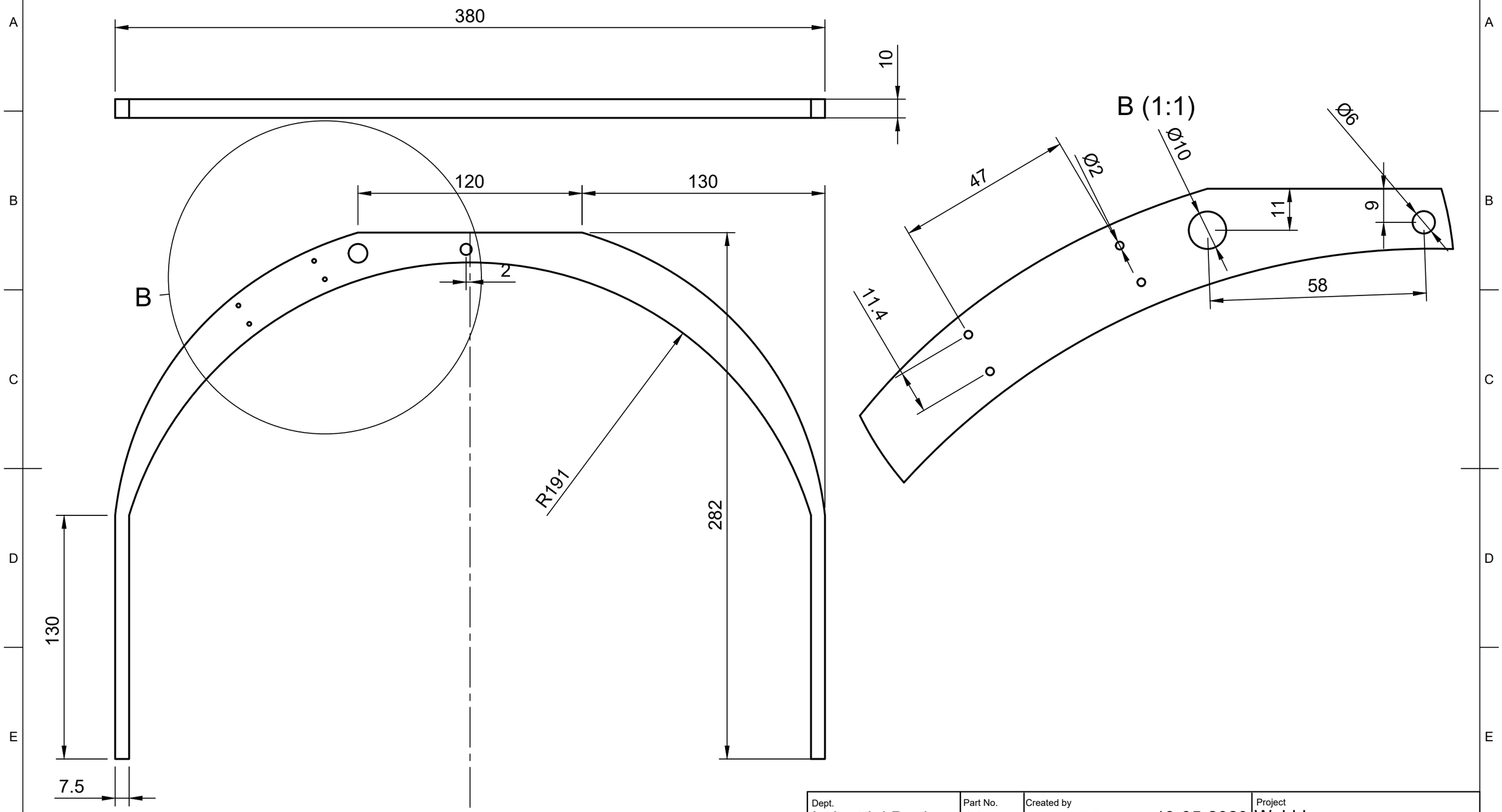

Dept. Industrial Design	Part No. 11	Created by MA4-ID8 19-05-2023	Project Wobble
		Document type Component	Production Laser cut
		Title Wobble Dock Upper middle rib	Materials MDF
			Tolerances ISO 2768-m -0,5
			Scale 1:2 / A3 / Sheet 22

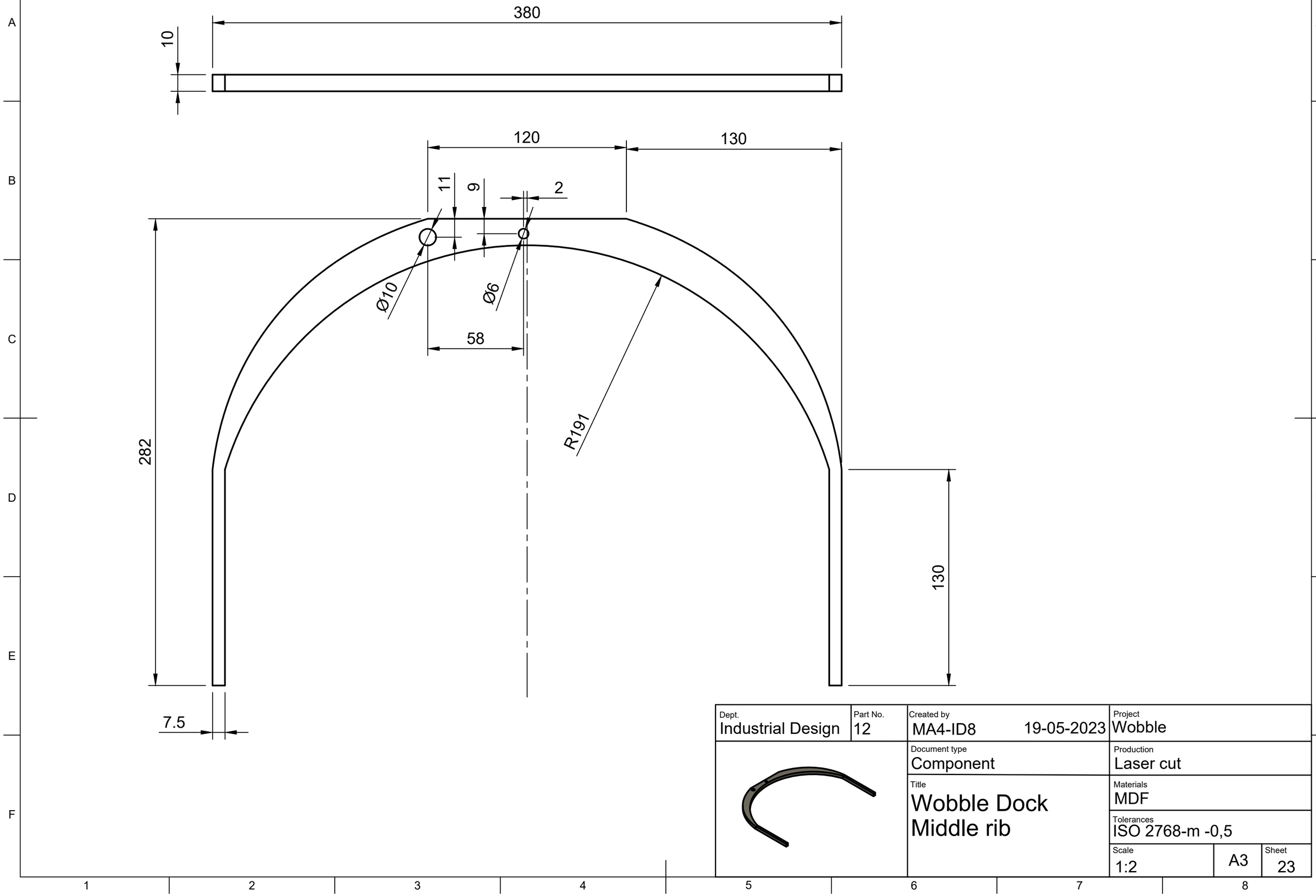

Dept. Industrial Design	Part No. 12	Created by MA4-ID8 19-05-2023	Project Wobble
		Document type Component	Production Laser cut
		Title Wobble Dock Middle rib	Materials MDF
			Tolerances ISO 2768-m -0,5
			Scale 1:2 / A3 / Sheet 23

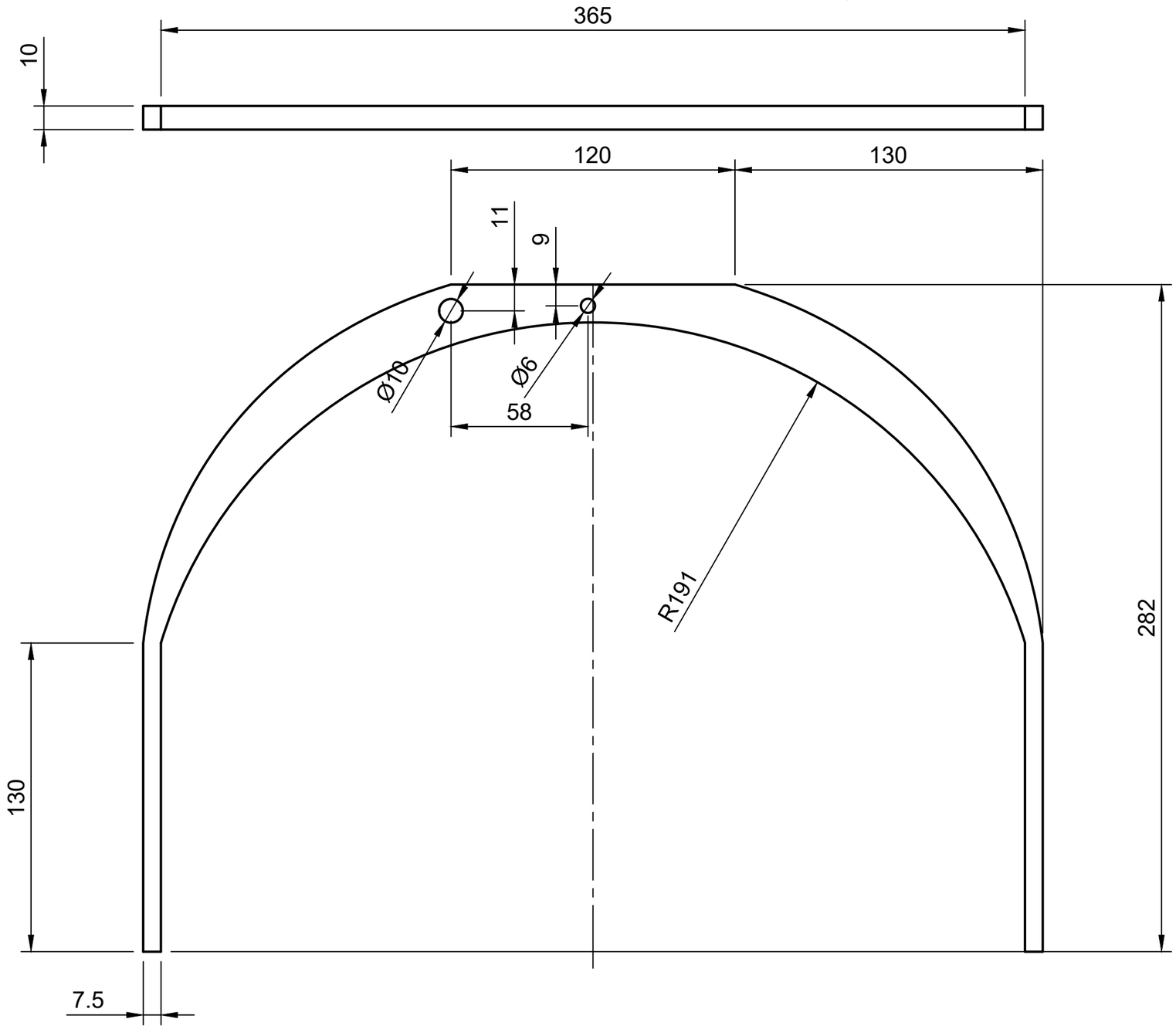

Dept. Industrial Design	Part No. 13	Created by MA4-ID8 19-05-2023	Project Wobble
		Document type Component	Production Laser cut
		Title Wobble Dock Bottom rib	Materials MDF
			Tolerances ISO 2768-m -0,5
			Scale 1:2 / A3 / Sheet 24

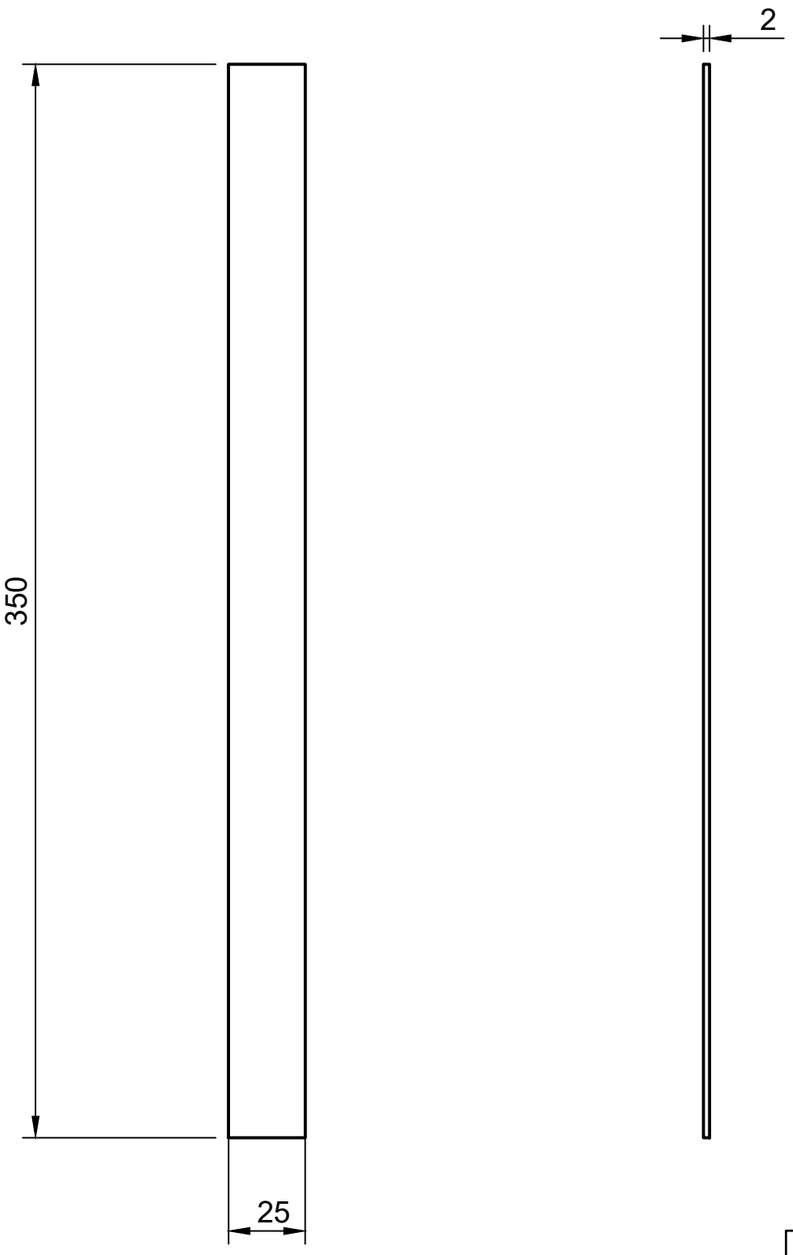

Dept. Industrial Design	Part No. 14	Created by MA4-ID8 19-05-2023	Project Wobble
		Document type Component	Production Cut
		Title Wobble Dock Back foot	Materials Neoprene
			Tolerances ISO 2768-m -0,5
			Scale 1:2 / A3 / Sheet 25

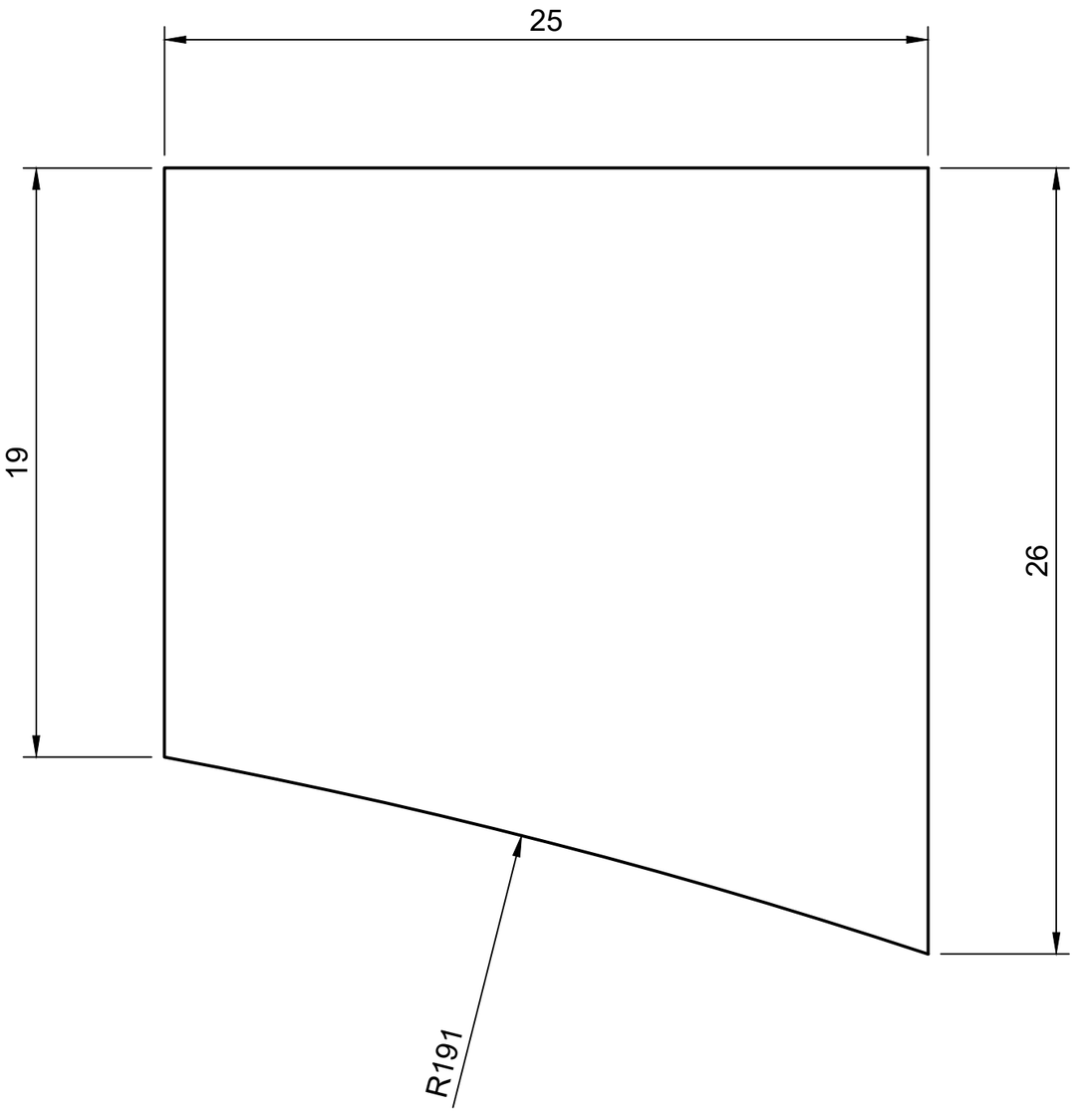

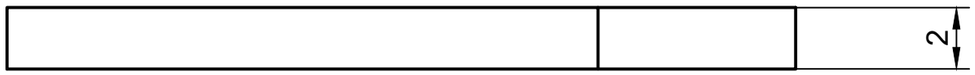

Dept. Industrial Design	Part No. 15	Created by MA4-ID8 19-05-2023	Project Wobble
		Document type Component	Production Cut
		Title Wobble Dock Rib foot right	Materials Neoprene
			Tolerances ISO 2768-m -0,5
			Scale 5:1 / A3 / Sheet 26

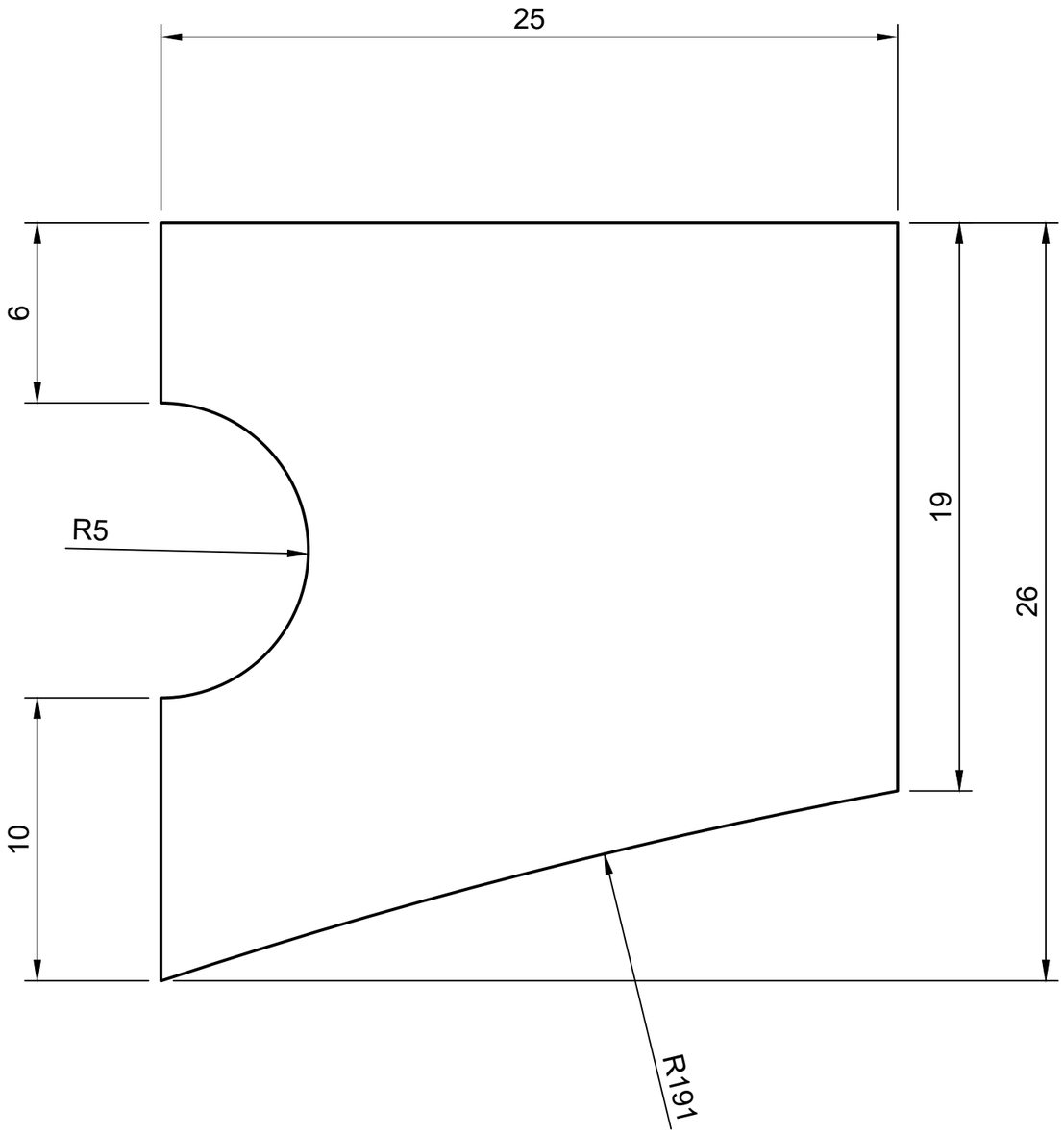

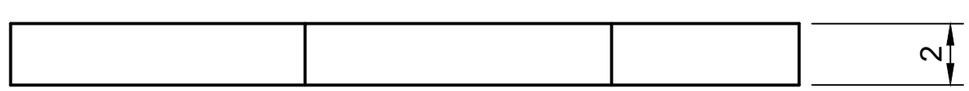

Dept. Industrial Design	Part No. 16	Created by MA4-ID8 19-05-2023	Project Wobble
		Document type Component	Production Cut
		Title Wobble Dock Rib foot left	Materials Neoprene
			Tolerances ISO 2768-m -0,5
			Scale 5:1 / A3 / Sheet 27

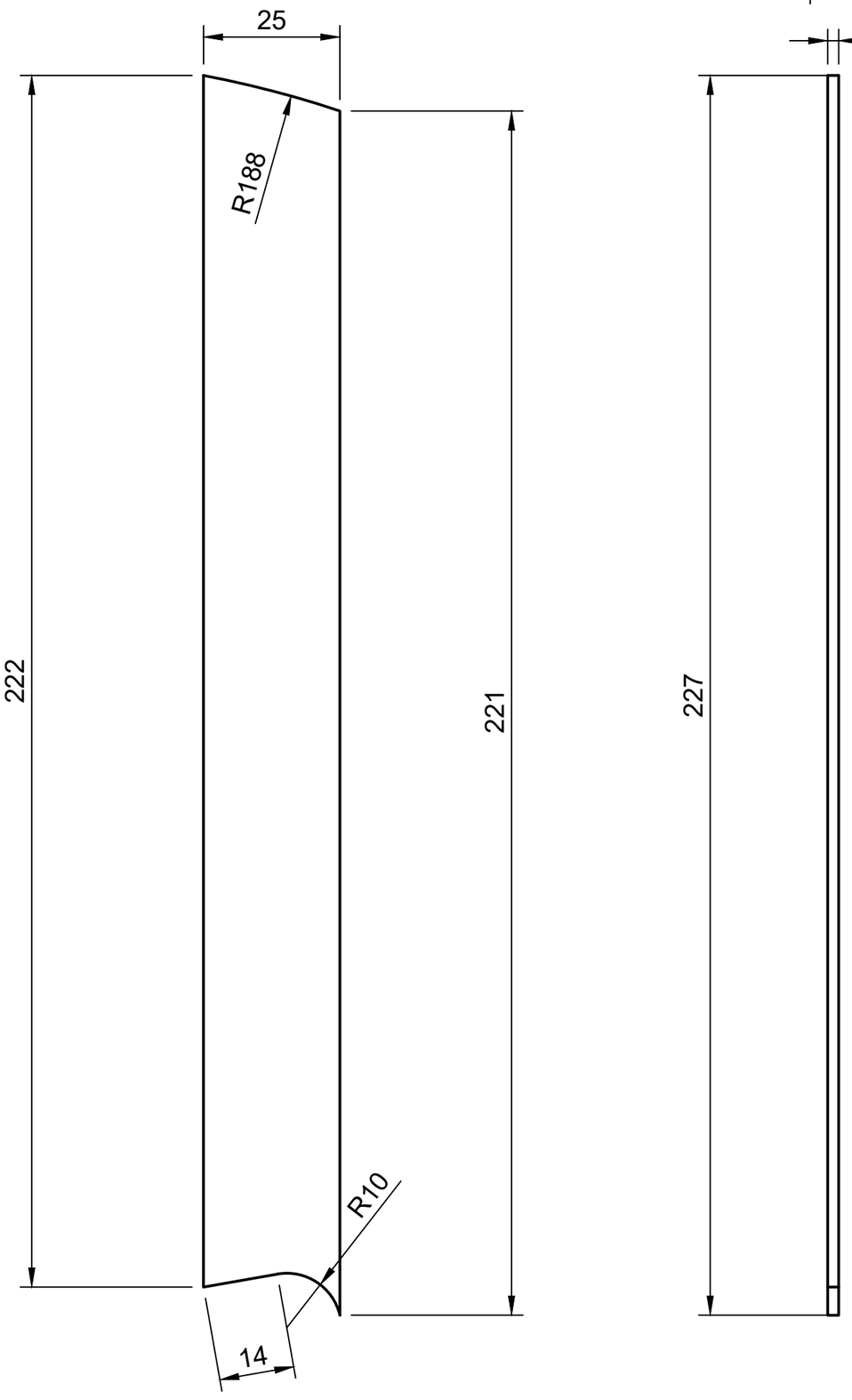

Dept. Industrial Design	Part No. 17	Created by MA4-ID8 19-05-2023	Project Wobble
		Document type Component	Production Cut
		Title Wobble Dock Center foot right	Materials Neoprene
			Tolerances ISO 2768-m -0,5
			Scale 1:1 / A3 / Sheet 28

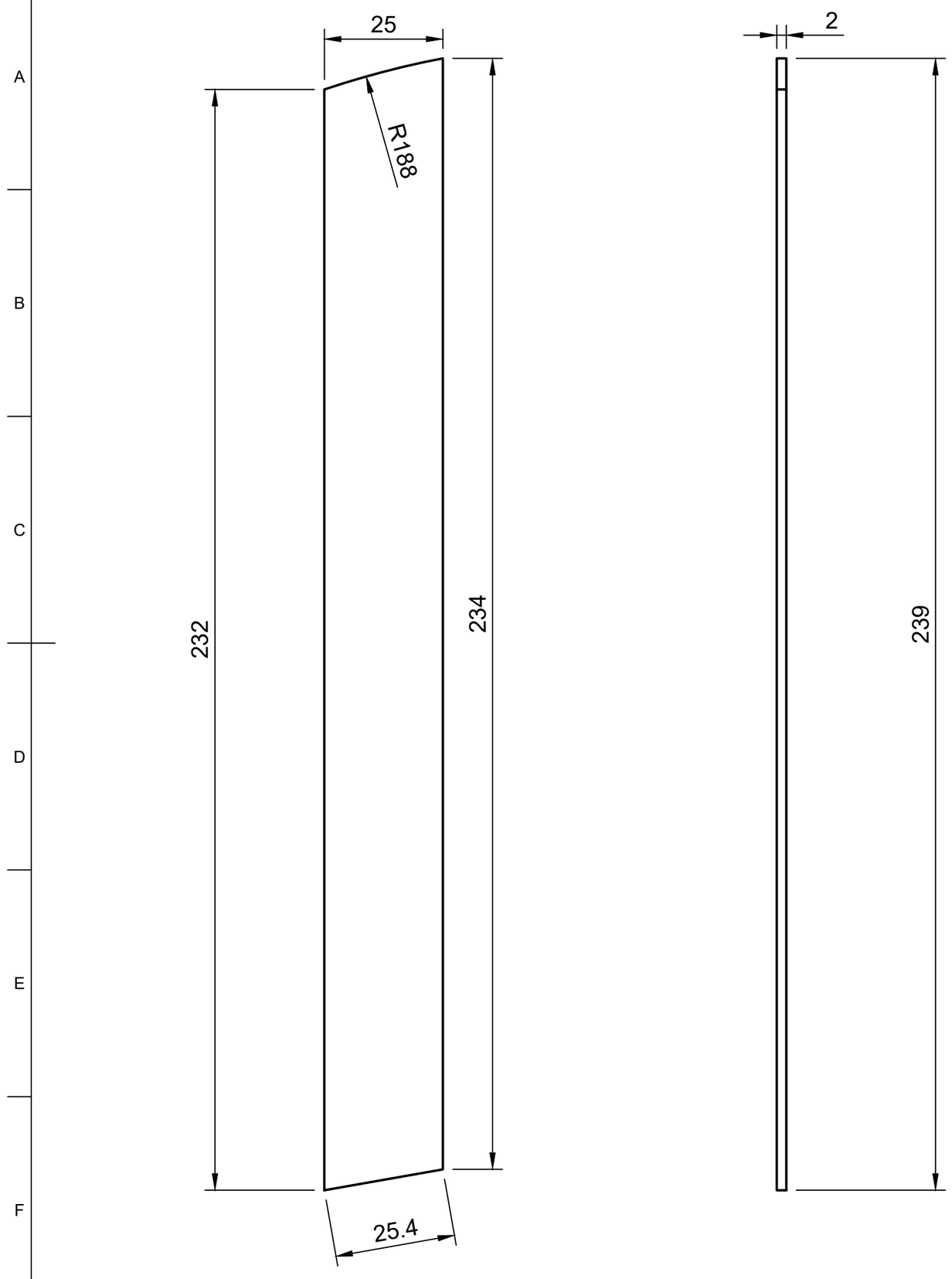

Dept. Industrial Design	Part No. 18	Created by MA4-ID8 19-05-2023	Project Wobble
		Document type Component	Production Cut
		Title Wobble Dock Center foot left	Materials Neoprene
			Tolerances ISO 2768-m -0,5
			Scale 1:1 / A3 / Sheet 29

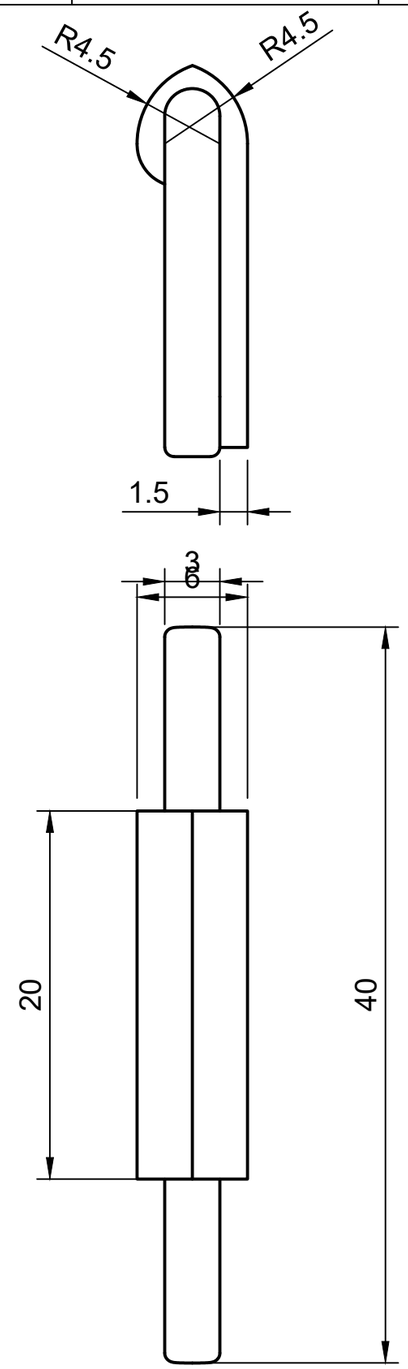

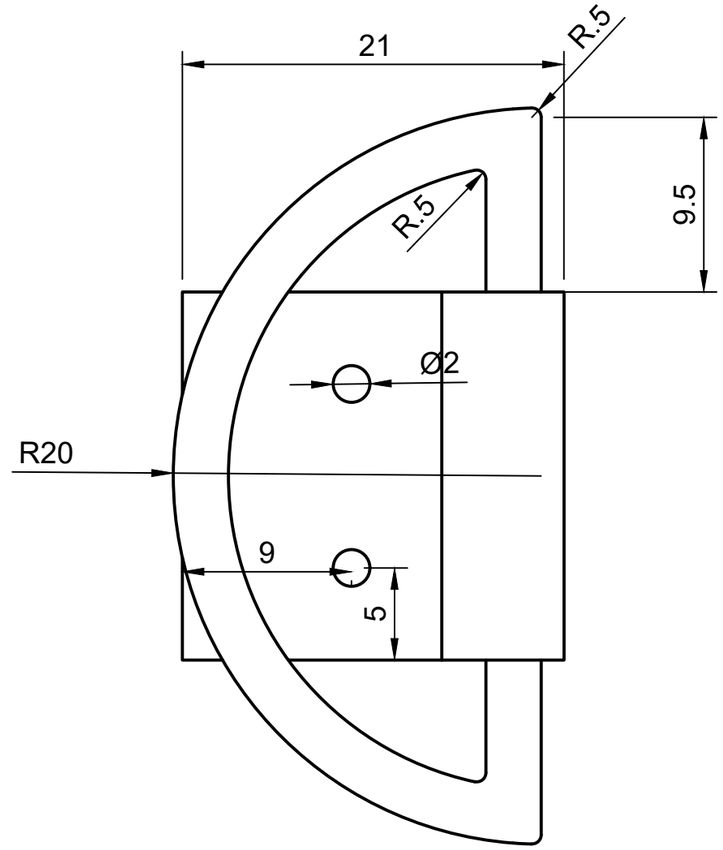

Dept. Industrial Design	Part No. 19	Created by MA4-ID8 19-05-2023	Project Wobble
		Document type Component	Production Laser cut, bent
		Title Wobble Dock Handle	Materials Steel
			Tolerances ISO 2768-m -0,5
			Scale 3:1 / A3 / Sheet 30

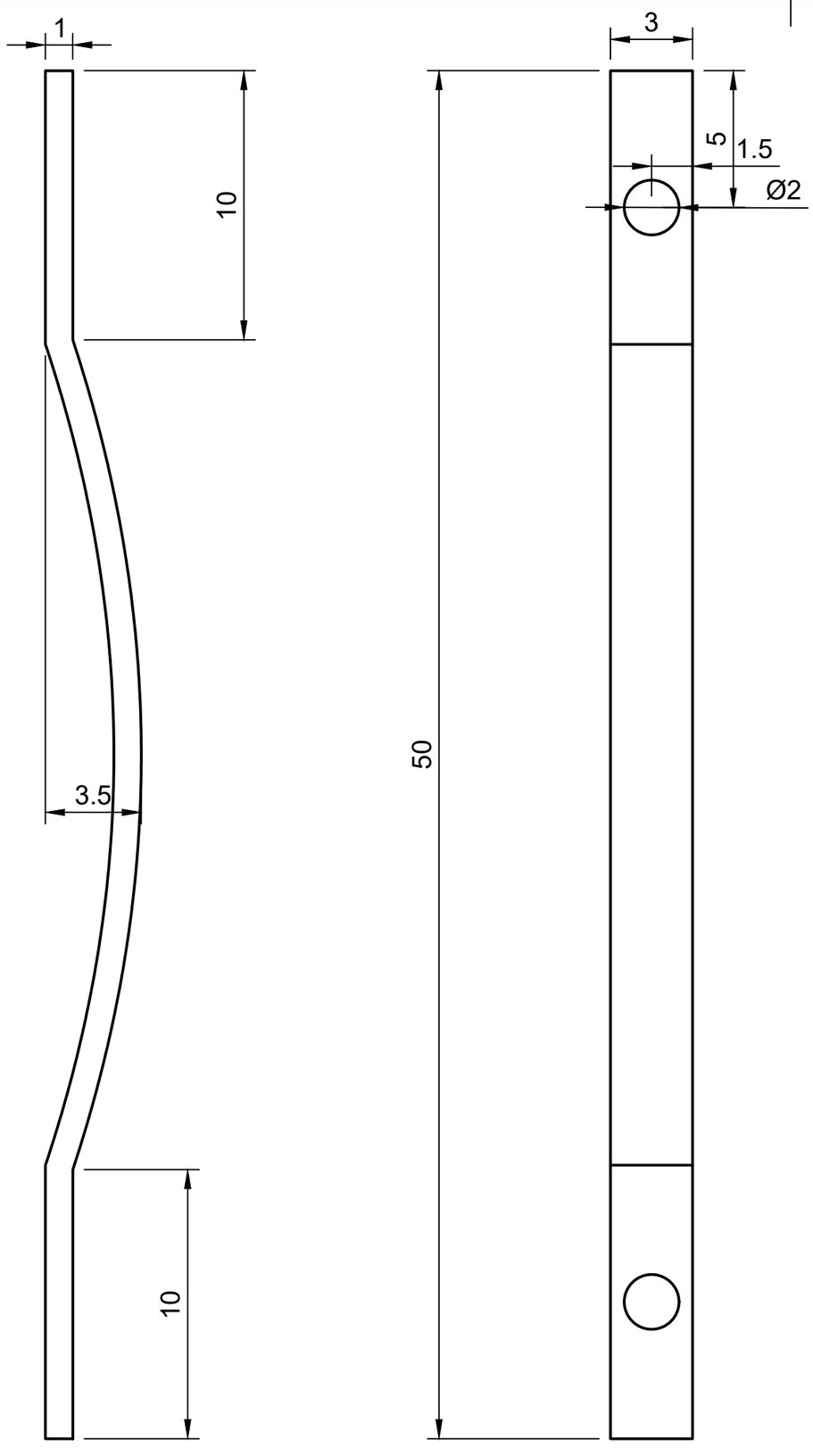

Dept. Industrial Design	Part No. 20	Created by MA4-ID8 19-05-2023	Project Wobble
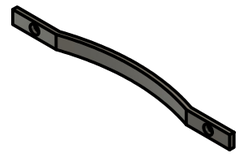		Document type Component	Production Laser cut, bent
		Title Wobble Dock Leaf spring	Materials Steel
			Tolerances ISO 2768-m -0,5
			Scale 5:1 / A3 / Sheet 31

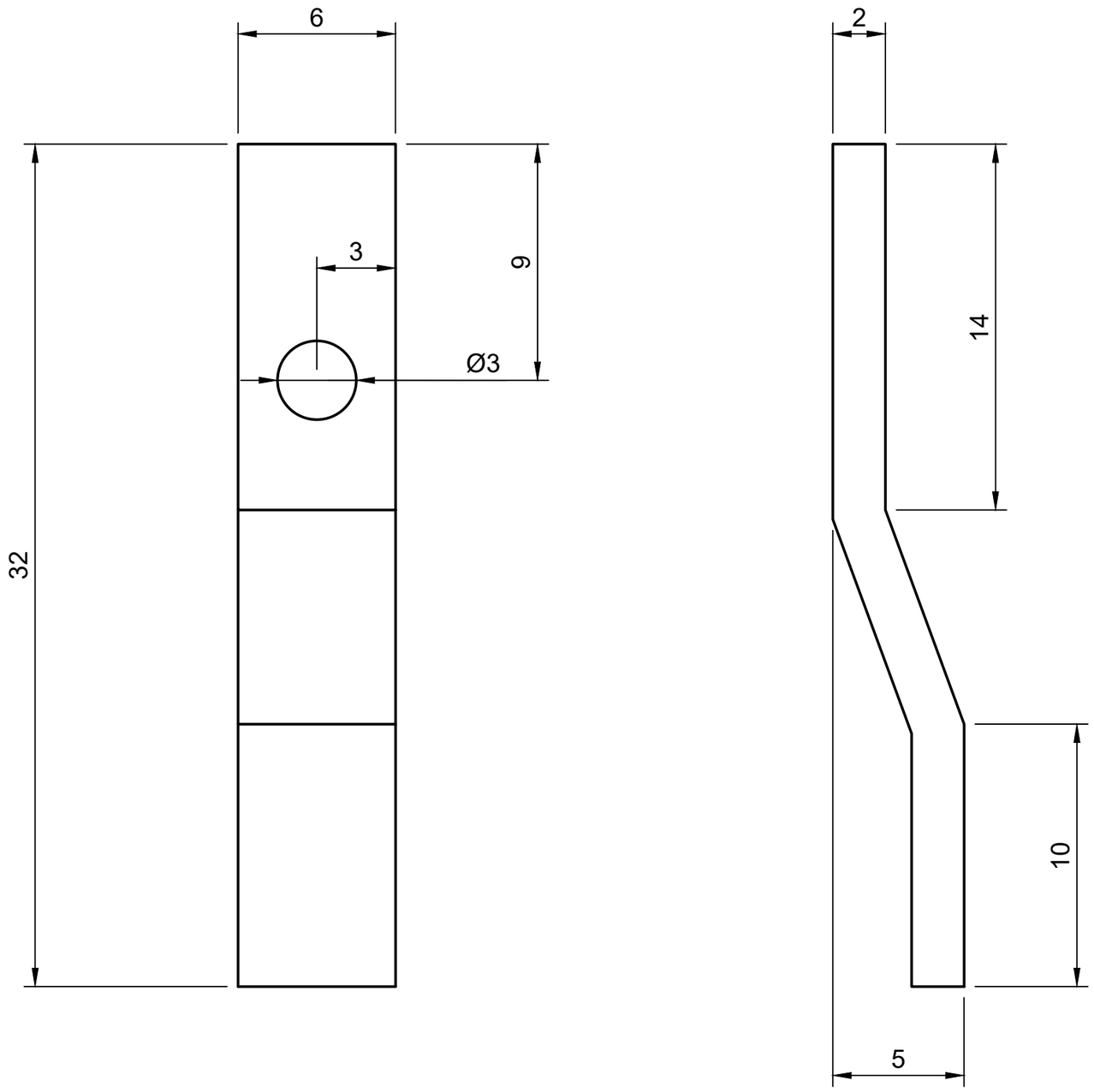

Dept. Industrial Design	Part No. 21	Created by MA4-ID8 19-05-2023	Project Wobble
		Document type Component	Production Laser cut, bent
		Title Wobble Dock Shelf spring	Materials Steel
			Tolerances ISO 2768-m -0,5
			Scale 5:1 / A3 / Sheet 32

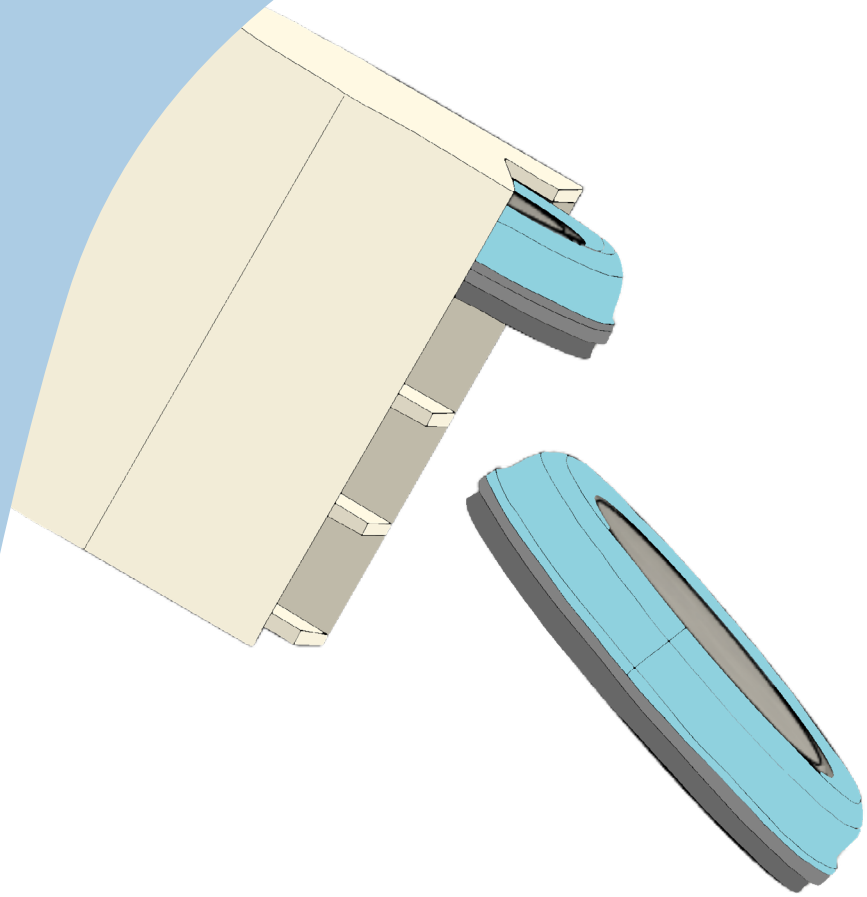

Wobble

through your trouble!

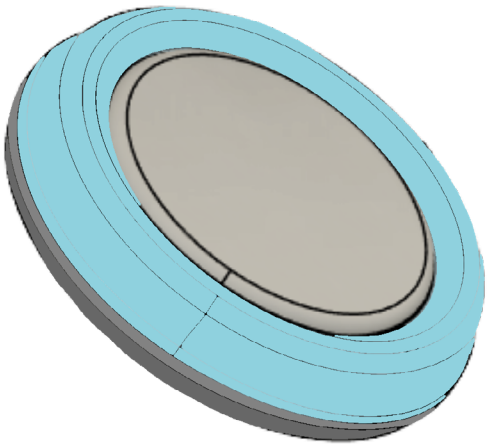

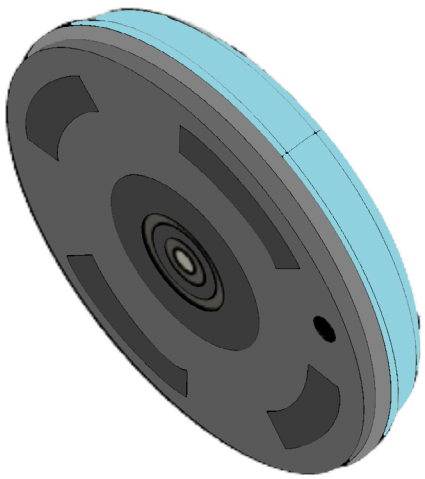

Process Report
Aalborg University | May 2024 |MA4-ID8
Philip Greth Faurschou, Kristian Faarup Hermansen & Line Brandt Hansen

Title Page

Title	Wobble - through your trouble!
Theme	Children's motor skills training gadget
Project	Master's thesis
University	Aalborg University
Education	Industrial Design
Report type	Process Report
Project team	MA4 - ID8
Project period	01.02.2024 - 30.05.2024
Main supervisor	Mário Barros
Co-supervisor	Benny Endelt
Number of pages	105
Appendix	52

The Team



KRISTIAN FAARUP HERMANSEN

PHILIP GRETH FAURSCHOU

LINE BRANDT HANSEN

Abstract

This project is a master's thesis about the development of a new training toy, Wobble, for children with motor skills issues. These children need a helping hand, as a lack of motor skills often leads to low self-esteem and affects their ability to participate in social groups, making it even harder for them to improve. Motor skills issues are a serious problem and can have significant repercussions for children growing up leaving permanent marks.

Currently, there is a limited selection of solutions for these children. They mostly include professional help from physiotherapists, emphasising consistent training of the primary senses and postural control. While the training is made to help the children, it is often neglected due to a lack of both motivation from children and time from the parents' side to help them.

Wobble has been developed to mitigate children's motor skills issues by providing playful training games with a rewarding progression system that will help motivate them to improve, with less dependency on their parents' time. Wobble is a system consisting of three elements: a Wobble App, four Wobble Pads, and a Wobble Dock.

The Wobble App provides a guide for playing the games, while the Wobble Pads are the main physical training pads that register input for the game. Lastly, the Wobble Dock provides a home for the Wobble Pads, giving them a place for storage, charging, and transportation.

Acknowledgements

The project group wants to thank all those who have committed their time and resources to this project. First, a big thank you to our supervisor Mário Barros, and technical supervisor Benny Endelt for their continuous guidance and support.

This includes a special thank you to Gitte Randorff Harrebek for her commitment and enthusiastic support of the project vision. She has provided invaluable knowledge and insights into children and physical therapy while always offering great feedback for concept validation.

Also a big thank you to all the parents and children, who have provided the project with insights from a real-world perspective. Particularly a big thank you to Rasmus and Christina Hansen for welcoming us into their home for testing and interviews.

Finally, a big thank you also to the personnel at Blåkildevej kindergarten for their hospitality. They have offered their time and a place to test every concept or idea that could be thought of. It has been a privilege to be able to come and go as needed, and it has provided great insight into the world of children and play.

Reading Guide

This project comprises four parts: a product report, a process report, technical drawings, and an appendix. This process report is divided into nine phases, each highlighting different aspects that have gone into the development of the product proposal. Each phase will present an introduction and end summary or design brief of featured content to maintain an overview when reading.

The report also includes references structured according to the Harvard method. A reference list is included at the end of the report. Additionally, references to the appendix will appear as (App. xx).

During the process report, six icons will appear highlighting things to be aware of:

Icons related to the reading:



Sum Up: This icon indicates a sum up after a section has been completed



Aware: This icon indicates when something big happens in the process, which either makes a direction shift or a need to be extra aware



Insights: This icon indicates that a new insight has been gained

Icons related to requirements:

New Requirement: This icon indicates that a new requirement has been obtained



Reassessment of Requirement: This icon indicates that a requirement has been reassessed

New Specification: This icon indicates that a new specification has been gained

The Double Diamond Process Timeline

The main method for demonstrating the thought process throughout the phases is the diverging and converging approach from the Double Diamond (Ill. 01) (Design Psychology, 2024). In this project, the method's primary purpose is to ensure proper framing and that the solution space is always in active reflection. It should be noted that the Double Diamond method will not be used as a timetable and deadline tool, but as a guide to ensure constant utilisation of design thinking (Ill. 02), considering that the problem is a wicked problem (Interaction Design Foundation, 2024). This allows us – the designers to apply a wide range of product solutions.

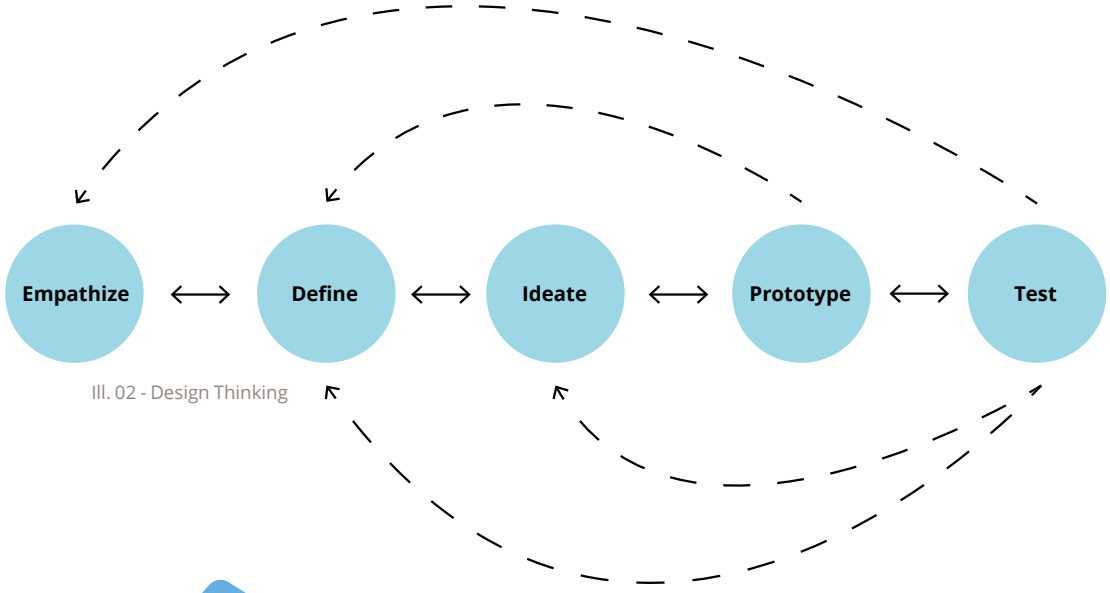

Ill. 02 - Design Thinking

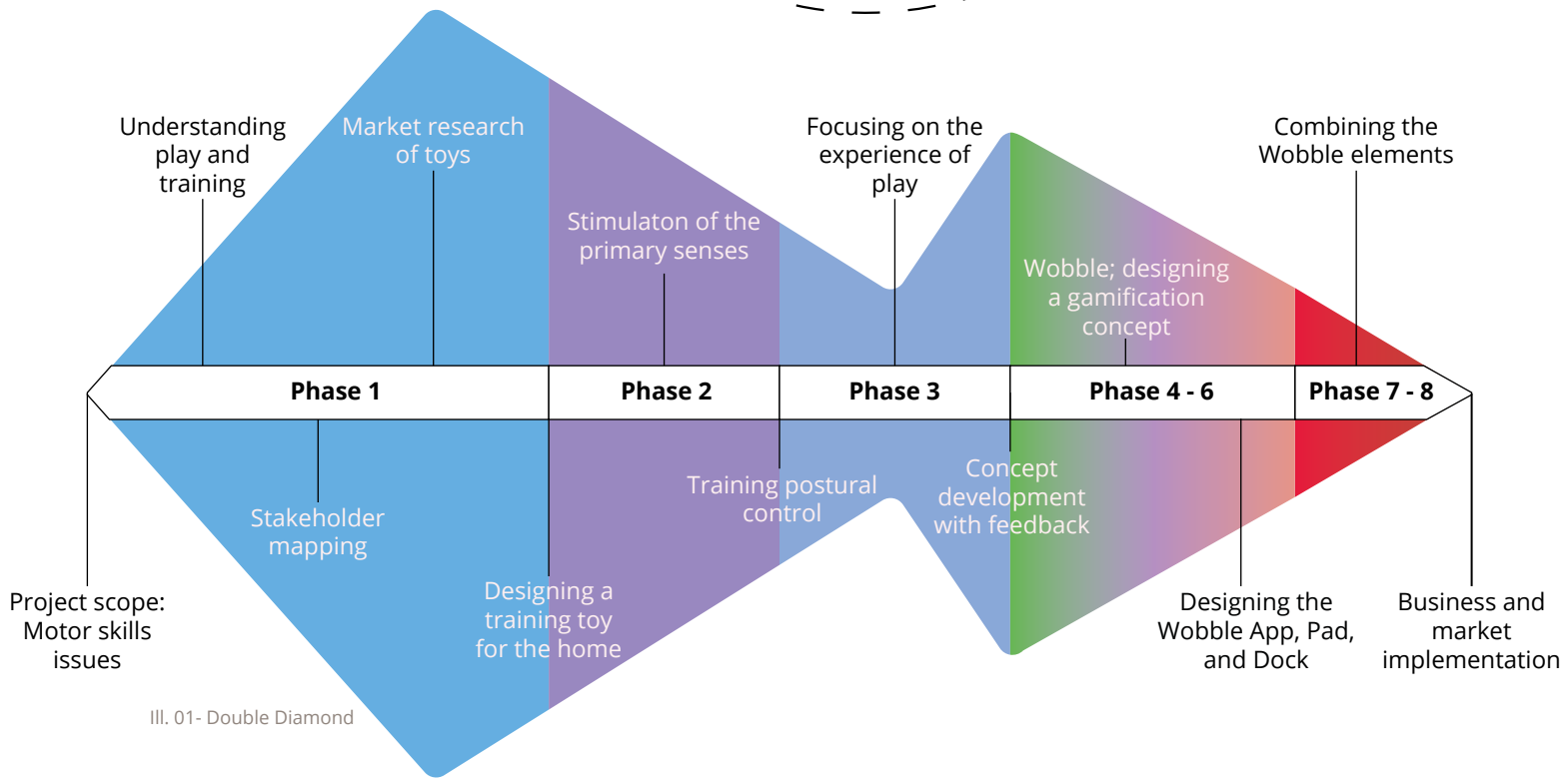

Ill. 01- Double Diamond

Motivation

This thesis started with an emphasis on tackling a wicked problem that could challenge every aspect of our collected experience as industrial design master thesis students. In this regard, a specific but comprehensive problem around children's lack of motor skills kept finding its way back due to its vast problem space where there was no given idea of how it could be solved. This has been a sizeable motivating factor as it also provides an opportunity for making a difference in an area where no solution is on the horizon. This approach is seen as a great way to utilise every aspect of our experience collected up to this point and exceed it with new challenges

Introduction

Children's motor skills issues often start due to too much time spent on inactive occupations like watching TV, using tablets, phones and the like. It is seen that these children frequently lack the fundamental motor skills for completing basic daily tasks like eating with cutlery or dressing themselves. These issues can have significant repercussions in social aspects, where a lack of motor skills often results in low self-esteem, causally excluding them from certain activities and social groups. This problem can be especially devastating for children as they grow up, leaving marks on them for the rest of their lives.

Currently, there are few ways to address these problems. One option often involves professional help from physiotherapists, who offer guidance and training activities to improve the children's issues. Unfortunately, this solution does not fit every child or family for several reasons, including money, time, motivation, etc.

The aim of this thesis is to create a motivating and fun experience for training motor skills that does not break the bank. This is with the hope that fewer children will need to experience the costly repercussions that a lack of motor skills can have on their lives.



Ill. 03 - Outdoor product that trains postural control

Table of Contents

Phase 01

Motor skills: What are they? 9
Gross motor skills 9
Fine motor skills 9
Developmental Motor Coordination Disorder 9
Statistics About DMCD 10
How to Improve Motor Skills 11
The Stakeholders 12
Theory of Play 13
Independent Play 13
Observations of Play 14
Children's Size and Longevity 14
Market Research 15
Use of Digital Media for Training Gross Motor Skills 17
The Paradox 18
Current Customer Journey 18
Initial Design Brief 19

Phase 02

The Vestibular System 21
Explanation of the Vestibular System 21
The Scale 21
How to Train 21
Motivation and Children's Play 22
Observations from Blåkildevej Kindergarten 22
The Pedagogues on Theory of Play 23
The Playground 23
Interview with Gitte: Motorikterapi 24
Postural Control 24
User and Context 25
The Context 25
Personas 26
Primary User: The children 26
Secondary User: The parent/s 26
User Scenario 27
Testing out Equipment 28
Bosu Ball 28
Twister 28
Concept Direction Exploration 29
Design Brief 2 31

Phase 03

Concept Feedback 33
SWOT Analysis of Concept Directions 35
Gamification 36
Successful Application of Gamification 37
Challenging Play Twister Concept 38
Observations and Feedback: Play Twister 38
Games Designed for Training of Postural Control 39
Test of Games 40
Follow Wobble 40
Wobble Tag 42
Crawling game 45
Problem Slicing 46
Requirements 47

Phase 04

The Interface 49
Children's Games for Tablets 50
Grown-up Only Section 51
Interactive Play Design 52
Need a Friend to be Fun? 52
Interaction with the Tablet 53
Critical Aspects and Main interactions 54
Parents vs. Children 55
Wobble Tag and Follow Wobble 56
Testing of Set-Up 57
Sum Up 59
Wobble App Requirements 59

Phase 05

Functionality 61
Dynamic Surface Testing 61
Size Testing of Dynamic Surface 62
Weight 62
Interaction testing 63
Registering Game Input 65
Form Study 67
Shape Ideation of the Outer Shell 67
The Aspect of Direction 67
Segmenting the Shape 68
Connectivity and Power 68
Creating a Network 68
Power On / Off 70
Shaping a Charging Connection 70
Power source 71
Construction and Production 72
Anti Skid Protection 72
Mounting of Dynamic Surface 72
Internal Design 72
Material Considerations and Durability 74
Production and Assembly of Parts 76
Sum Up 77
Wobble Pad Requirements 77

Phase 06

Charging 79
Wiring of Charger 79
Shaping the Dock 80
Shape Development 82
Securing Wobble Pad 82
Construction and Assembly 83
Shelves 83
Frame 84
Assembly 84
Materials 84
Size of Wobble Dock 84
Wiring of Essentials 85
Communication 85
Sum Up 86
Wobble Dock Requirements 86

Phase 07

Combining the Parts 88
Interaction Flow 89
Requirements and Specifications 90

Phase 08

Market Scope and Landscape 92
First-year plan 94
Execution Plan (5 years) 94
Production Cost and Realisation Budget 95
Business Model Canvas 96
Triple Bottom Line 96

Phase 09

Conclusion 99
Reflection 100
Product 100
Process 101

Phase 01
Initial Reserch

This phase covers the initial research and framing of the project with investigations into the world of motor skills. This covers both theoretical approaches as well as field studies. The goal is to set a foundation for the project, chart the stakeholders, and choose a path to a problem space where product design can be a helping part of the possible solution. The phase concludes with a design brief that is set to mark the ongoing work of the project.



Ill. 04 - Outdoor product that trains postural control

Motor skills: What are they?

Motor skills are essential for completing basic daily tasks, and they can be separated into two different kinds: “gross motor skills” and “fine motor skills.” When growing up, these are developed mainly through playtime but also through tasks such as putting clothes on, eating, or moving up and down stairs. The two different categories of motor skills make use of different muscle groups but these are often used simultaneously to complete a task.

Gross Motor Skills

Gross motor skills are seen as the ability to produce precise, fluid, and smooth movements that are necessary for engaging in a variety of playground activities, moving across space safely, and competing in sports. The term gross motor skills refers to large movements performed by the whole body (OT for Kids, 2024). The core muscles of the body perform everyday functions such as jumping, standing, sitting, walking, and running. Also, gross motor skills include “eye to hand” coordination, which is used when e.g. catching, but it also serves more simple tasks seen all the time throughout the day like reaching for stuff. A lack of gross motor skills can cause problems as seen on Ill. 05.

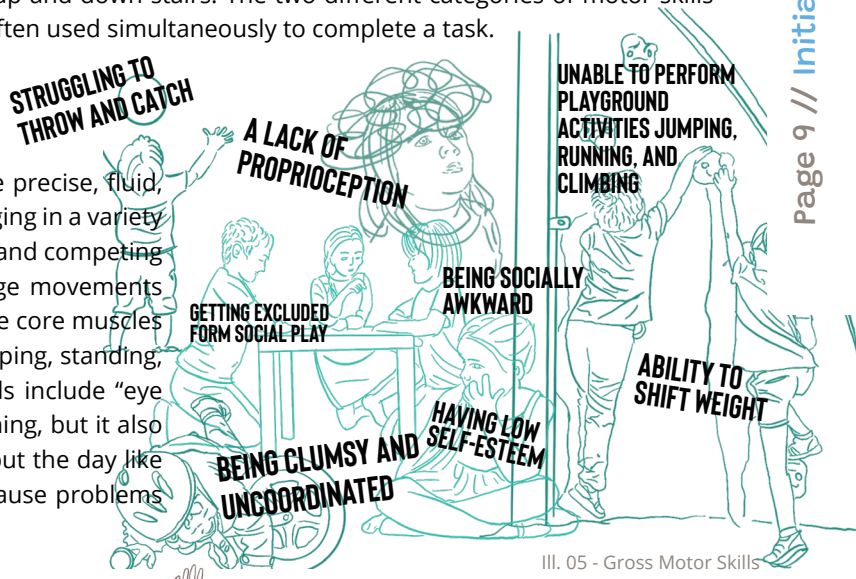

Ill. 05 - Gross Motor Skills

Fine Motor Skills

Fine motor skills is a term regarding the intricate and detailed movements of the hands. They are tasks that require manipulating, controlling, and using objects (OT for Kids, 2024). It is important to understand that fine motor skills revolve around the smaller muscle groups, which are specifically located in the hands and everything we do with our fingers. (Kid Sense, 2024) A lack of fine motor skills can cause problems as seen on Ill. 06.

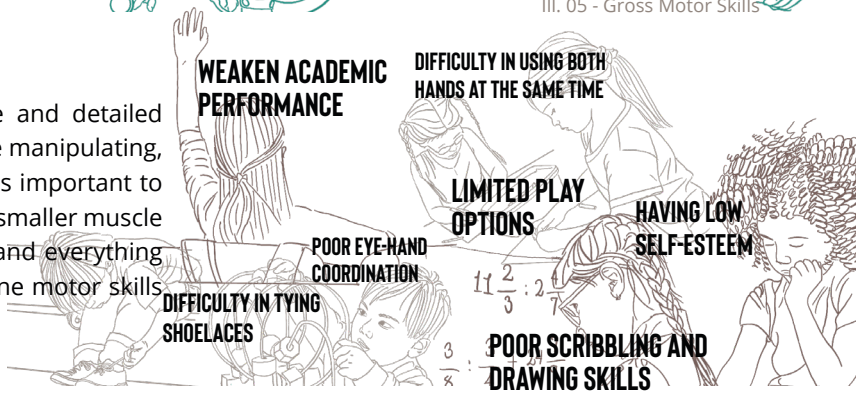

Ill. 06 - Fine Motor Skills

Developmental Motor Coordination Disorder

In more severe cases, motor skill issues can result in Developmental Motor Coordination Disorder (DMCD), a lifelong condition in which learning motor skills and coordination becomes incredibly difficult. DMCD can affect learning, yet it is not considered a learning disorder. Children with DMCD struggle especially with physical tasks and activities that are required both in and out of school.

As DMCD is an evolution to just having regular motor skill issues it as well can cause motor planning issues, where it can be challenging to figure out how to perform self-care tasks like brushing your teeth and putting on clothes if you already struggle with it. Likewise, children may also find it difficult to prepare a bowl of cereal, and their balance even makes it difficult for them to sit still while eating. (Understood for All, Inc, 2024)

It is important to note that all children develop motor skills at different rates, which can make it hard to determine if observed problems in their movement patterns are something that will pass or follow them more or less perpetually in some way. It is important to be able to diagnose DMCD at an early stage as it is a disorder that is not curable, but it can be treatable through repetitive training in the troubled area of movement. (Cleveland Clinic, 2022)

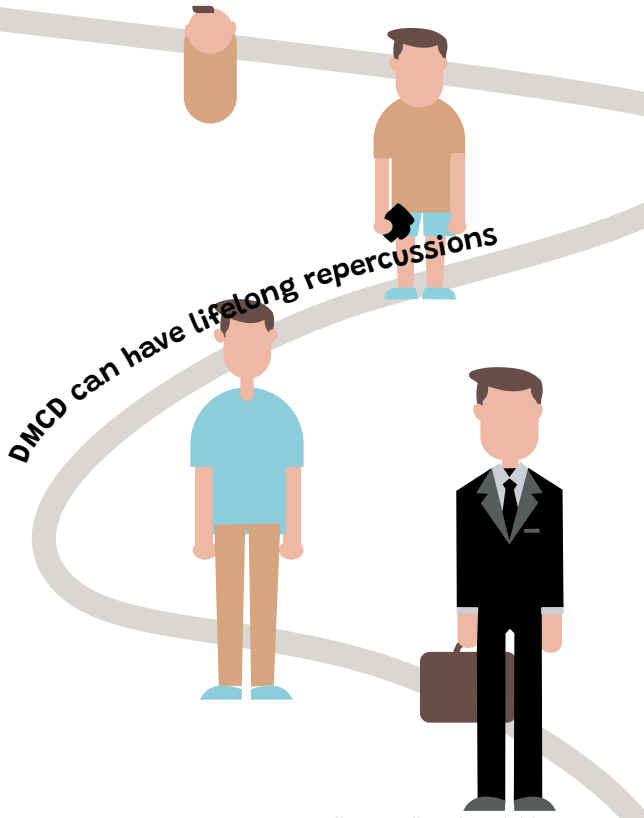

Ill. 07 - Follow though life

Statistics About DMCD

Initially, DMCD is relatively common with a prevalence of approximately 6% of school-aged children which is around 1 in every 20 children. The children are screened for motor skills problems in preschool, aged 5-7 years. For more details see App. 1 & App. 2.



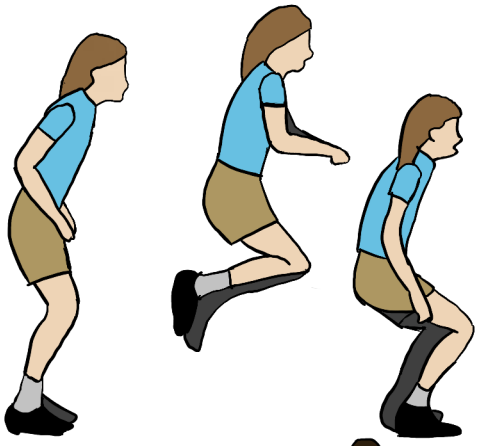



Children having remarks on walking, jumping on two legs, and keeping balance while walking a line have a higher than **60%** likelihood of having DMCD

7,7% of children suffering from DMCD is boys

4,7% of children suffering from DMCD is girls

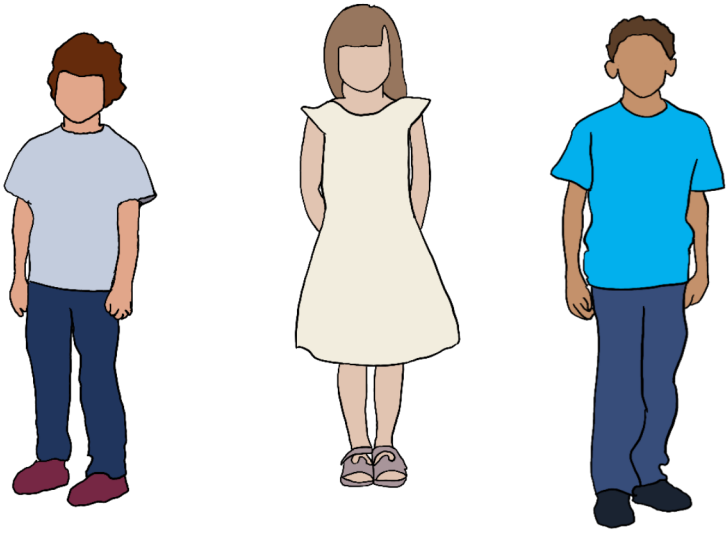

29% have at least one remark on motor skills in the examination.

13,6% have at least two remarks on the examination.

6,3% have at least three remarks on the examination, which is the margin for DMCD.

Children that suffer from DMCD:
Denmark: 11.389
European Union: 431.171



1 out of 20 children suffer from DMCD

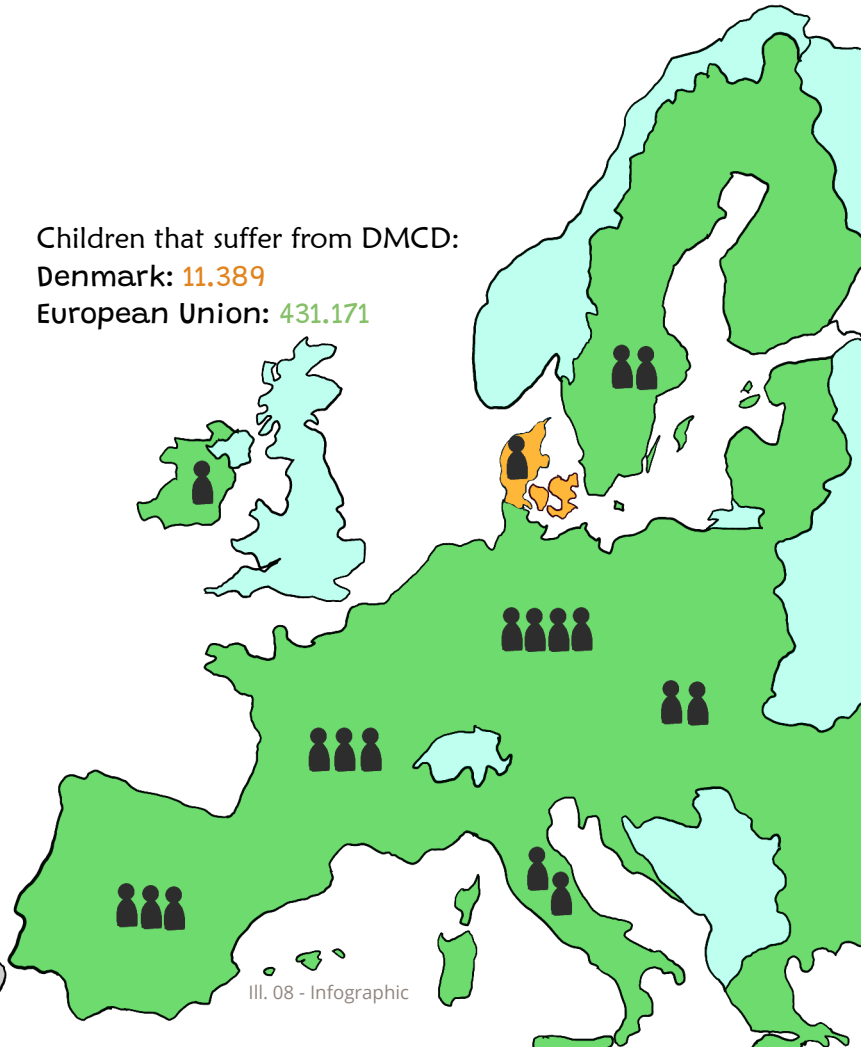

Ill. 08 - Infographic

How to Improve Motor Skills

Gross Motor Skills - The Root of the Problem

In another conversation with optometrist, Dorthe Borgkvist (App. 3) who owns the clinic: "Klinik Syn og Indlæring", Dorthe affirmed that gross motor skills, or basic motor skills as she called them, are the root of motor skills problems even those of fine motor skills.

"*The children who don't thrive, they are actually the ones who are feeling bad motorically, because it is their basic motor skills that are the basis of their fine motor skills [...] if they have not been doing sports or something, which has given them good fitness, good coordination, and good balance, and good hand-eye coordination, cognitive thinking, and all these things here, right? So then we have the problem*"

- Dorthe Borgkvist

Therefore, to develop fine motor skills, gross motor skills must first be developed. Dorthe also emphasised that when developing gross motor skills it is important to be active and consistently stimulate the three primary senses for at least 30 minutes a day. These are the sense of balance, the sense of touch, and the muscle-joint sense.

Ill. 09 - Dorthe Borgkvist



The Sense of Balance

One of the key factors for the improvement of a lack of motor skills is the sense of balance. The sense of balance is the foundation on which motor skills are built and is the most important to train when developing motor skills (App. 3). The sense of balance comes from the balance organ also known as the vestibular system. The information that is registered in the vestibular system is sent to the brain for processing, which is then transferred to other organs like the eyes, joints and muscles. This combined is what allows individuals to keep their balance and to know what position their body is in. When the organs are sending contradictory messages to the brain most people will experience motion sickness (National Library of Medicine, 2023). Exercises like standing on one leg, walking on a balance beam (Ill. 10) and standing up from a chair without using hands can be used to train the sense of balance. (Watson, 2023)

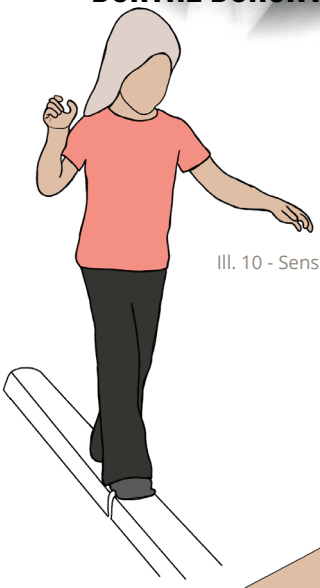

Ill. 10 - Sense of Balance

The Sense of Touch

The sense of touch is a key factor in children's ability to sit still and concentrate. Children usually have problems with their sense of touch if they are very sensitive to being touched on the back where they are unable to reach, themselves. The sense of touch (Ill. 11) can be stimulated by playing games that include frequent contact with the back like playing in a ball pit or playing at a playground like LEO's Legeland (LEO'S Legeland, 2024) where there are lots of obstacles that you get to touch. This will gradually improve children's ability to sit still and concentrate.

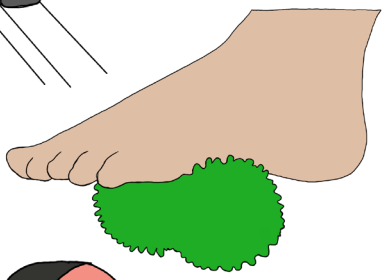

Ill. 11 - Sense of Touch

The Muscle-Joint Sense

The muscle-joint sense (Ill. 12) is a key factor in maintaining posture, controlling movements, and perception of space. An understimulated muscle-joint sense can contribute to a lack of the ability to be able to be active. Children who have problems with this sense are often very stiff and not very athletic. The problem with muscle joints is especially visible in the children's Achilles tendon and their chest area. These tendons can be trained by playing on a trampoline or playing in the forest which has very soft ground where the heel is being pushed lower than the front of the foot. Stretching is generally a good exercise when aiming to improve the muscle-joint sense.

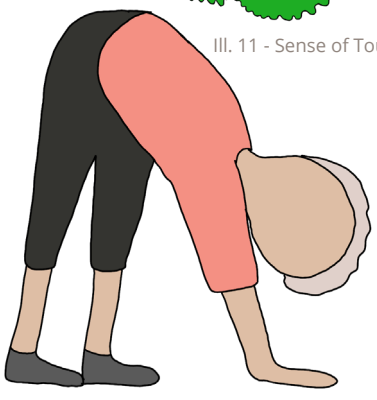

Ill. 12 - Muscle-Joint Sense

ACTIVATE COGNITIVE THINKING

ACTIVITY AND STIMULATION OF THE PRIMARY SENSES FOR 30 MINUTES A DAY

The Stakeholders

When considering the main stakeholders involved in developing children's motor skills, the following three contexts should be considered: education facilities: kindergarten and School, Professionals: the clinic, and Parents: the home. These three stakeholders come from the journey the children go through when they are being diagnosed. The knowledge about the journey comes from stakeholders from the Aalborg area and the entire user journey for diagnosticating can be found in (App. 4).

Parents: The Home (B2C)

Why children lack motor skill

There is a growing tendency of parents wanting to keep their children from getting hurt. This generally results in parents feeling the need to keep an eye on their children when they are playing outside in nature. This often results in them having to set aside a lot of time for playtime especially when playing outside in nature. This situation can be taxing on the parents but also causes less room for the development of independent play and thereby the development of independence in their children. Constant surveillance has not always been the norm of parenting but it has become more normalised in the last few decades. As a result, children are spending less time outside and more of their time indoors, where gross motor skills are not developed as much as fine motor skills (Danmarks Naturfredningsforening, 2024).

The challenges of physical therapy at home

As communicated by Dorthe (App. 3) some clients are struggling with doing physical therapy at home. This can come down to a lot of factors like time, not seeing progress or thinking it is boring. It is common in physical therapy that patients, even adults, cannot keep up with their programs and exercises at home and only do physical therapy while at the clinics (Masis, 2024). This becomes even more difficult when doing physical therapy at home where children are involved because the parents not only need to activate themself now but also the children. This can cause conflicts at home and thereby promote negative associations with rehabilitation.

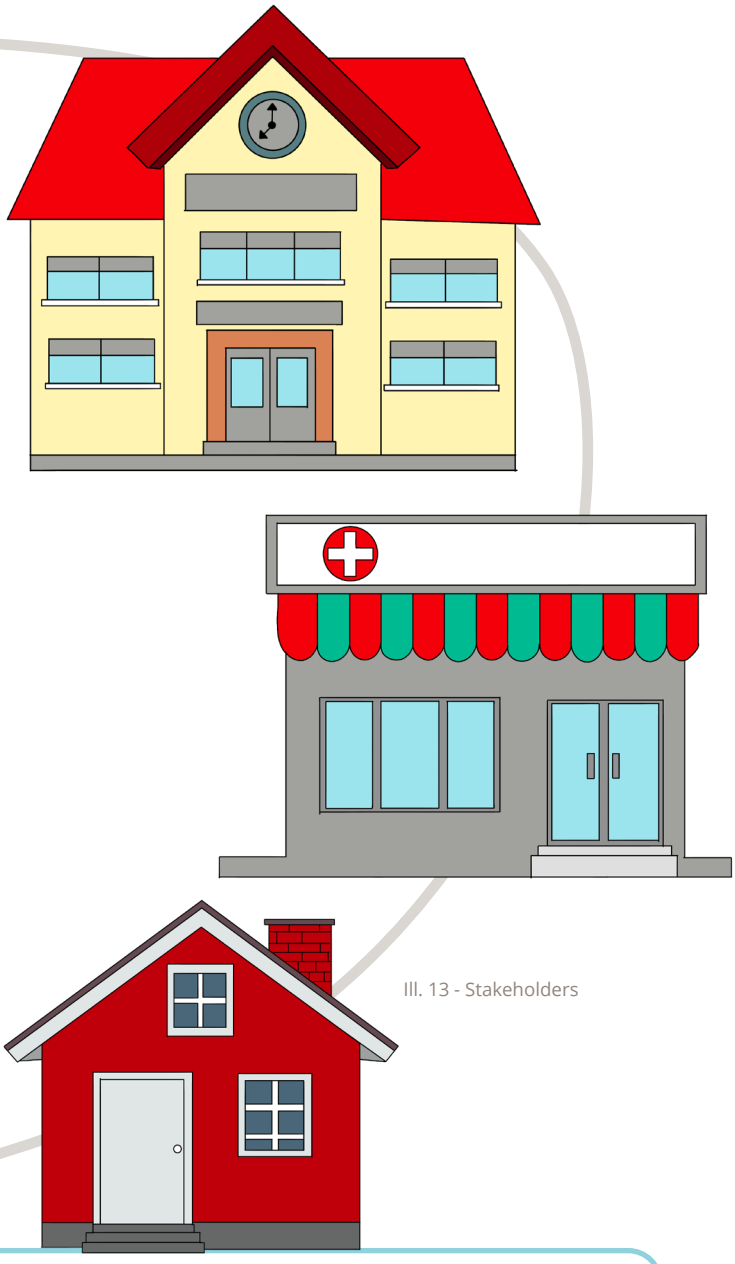

Ill. 13 - Stakeholders

CHOICE OF PROJECT FOCUS

The context that the product is being designed for is the home. More specifically the size of a children's room. This is based on the knowledge gained through interviews with Vibeke Grandt, a physiotherapist and lecturer from Syddansk Universitet (App. 5) and Dorthe (App. 3) and visits to various play stores (App. 6). Through the trips to the stores, it became evident that most products that train motor skills for children in the age group 5-7 years are for outdoor use like trampolines, playgrounds, swings and balls. Considering that children are spending less time outside than older generations (Krefeld, 2024), this could contribute to the lack of motor skills among children in today's society. This is why there is a need to bring a product for indoor use into the home that can train gross motor skills.

FUNCTION IN AN INDOOR SETTING

Theory of Play

To get a deeper understanding of how to develop a product for children in the age group of 5-7 it is important to understand the basics of the one thing that they do the most which is play. As play can be a very fuzzy concept, studying theory on the matter is a great starting point. In (Lillard, 2015) descriptions by the Swiss psychologist, Jean Piaget explains children's criteria for play in an ethological way by behavioural categories. These are sensorimotor play, symbolic play and games with rules. Descriptions by an American professor emeritus of ecology and evolutionary biology named Marc Bekoff, Ph.D. are also noted in the material. He emphasises explaining play by child and animal behaviours where he has created five examples to explain the coherence. Three of these examples will be used to create an understanding of Piaget's three criteria for play sensorimotor play, symbolic play and games with rules. (App. 7).

Games with Rules

Games with rules are characterised by competitions and established regulations which can be described as an evolvement from the egoistic means of symbolic play to now accommodating rules set by others. It encourages children to adopt rules that are different from their own promoting personal development. It is important to note that games with rules can tend to become more like work the more it is practised. This is very apparent if it becomes a profession as part of growing up. An example of games with rules from Bekoff is stated as follows:

"*A group of neighbourhood children spontaneously engage in a game of stickball, designating roles and locations, then beginning to bat and run.*" *(Lillard, 2015)*

- Marc Bekoff, Ph.D.

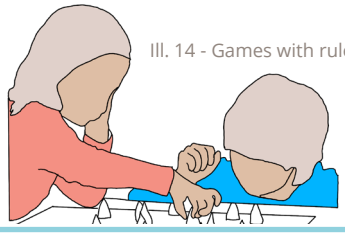

Ill. 14 - Games with rules

Symbolic Play

Symbolic play is characterised as pretend play where one object can be used to stand in for another. It is described as an egoistic type of play as children that practise it are changing reality to fit their desires and needs because they cannot accommodate reality. It can also be used as a means to complete real-world goals like pretending you are someone else when doing chores, essentially making them a game. An example of symbolic play from Bekoff is stated as follows:

"*A 3-year-old dresses a toy stuffed cat in a doll outfit and lays out a miniature tea set. He proceeds to pour and drink "tea" while also holding a cup to the cat to "drink."* *(Lillard, 2015)*

- Marc Bekoff, Ph.D.

According to Piaget children do outgrow pretending as they grow up and develop the ability to adapt to reality.



Ill. 15 - Symbolic play

Sensorimotor Play

Sensorimotor play is characterised by its purpose of affecting sensory and motor stimulation. It can best be described as interacting with an object or one's body with no real purpose. An example of sensorimotor play from Bekoff is stated as follows:

"*An 11-month-old girl shakes her head, and then her father shakes his head. She laughs uproariously and shakes hers again, then watches her father intently*" *(Lillard, 2015*

- Marc Bekoff, Ph.D.

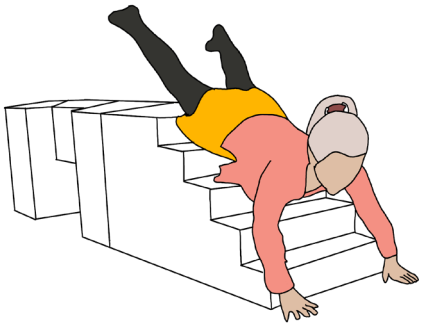

Ill. 16 - Sensorimotor play

SUM UP

PROMOTE PLAY RATHER THAN WORK

It is apparent that "games with rules" but also "symbolic play" can be utilized in the project as they represent factors that would fit the user group of 5-7-year-olds. One specific note from "Games with Rules" does stand out as it could be important to the project. This is the tendency of games with rules becoming more like work indicating possible addiction or that too much play of this play type might become problematic or boring if not regulated properly.

Independent Play

As described in the Stakeholder section, one of the obstacles children often face is their inability to play alone or engage in "independent play" due to their parents' constant surveillance. Independent play not only builds self-reliance skills and boosts creativity for children, but it also allows the parent to take a break or do other things (Duncan, 2023). For more details about independent play see App. 7.



PROVIDE SOLO PLAY

Ill. 17 - Independent play

Observations of Play

A visit to LEO's Legeland (LEO'S Legeland, 2024) was arranged to better and more practically understand how children play and what their parents think about their children's motor skill development (App. 8).

Throughout a set of interviews and observations, it became clear that if children were left to their own devices, they would challenge themselves more and quickly adapt to new social bonds. Children who had never met each other before started to play together and began to challenge themselves when their parents were not keeping a close eye on them. This was especially evident in the interview with Maria and Bettina (Ill. 18), where the two children showed these characteristics while the parents were interviewed.

Other insights gathered from the trip included a realisation of the significance that is the variance in children's physical size which could be a challenge when designing a product that would have to work across an age range. Additionally, the parents were asked about the price of a product that would help train their children's motor skills. The responses were almost exclusively like the following,

"*Money is not a problem if it is a product that will have the ability to help them*"

- Maria (App. 8).

Lastly, the possibilities of utilising a digital solution for a product proposal were almost implied as the parents emphasised that their children already had the urge to use digital media for both learning and play. They elaborated that this urge would not go away anytime soon with the digital direction society already has taken. While their children's use sessions are currently mostly stationary the potential for using digital devices as part of active play was seen as large because of the motivating factors that exist on digital platforms.

Ill. 18 - Family from LEO's Legeland



INCLUDE DIGITAL MEDIA

Children's Size and Longevity

As stated in the previous section it was realised that children grow and develop rapidly. There is a variety in height and weight for the target age group (5 to 7 years old), which can have significant implications for the proportions and strength of a product proposal. So, to ensure the longevity of a product proposal, research on children's height and weight was initiated (App. 9).

Through this research, it was discovered that there is a big difference in the height of the children in the age group. It is important to remember that not all children are the same, and thereby the children were sorted into categories of small, medium, and large. However, the most important height and weight to note are those of the small children aged 5 and the large children aged 7, due to those being the upper and lower limitations to design for. This will create a delimitation, so every child between these ages should be able to use the product regardless of their size. (Sygebørn, 2024)

- The average height and weight of the smallest children at 5 years old are approximately 103 cm. and 15,3 Kg.
- The average height and weight of the largest children at 7 years old are approximately 135 cm. and 29 Kg.

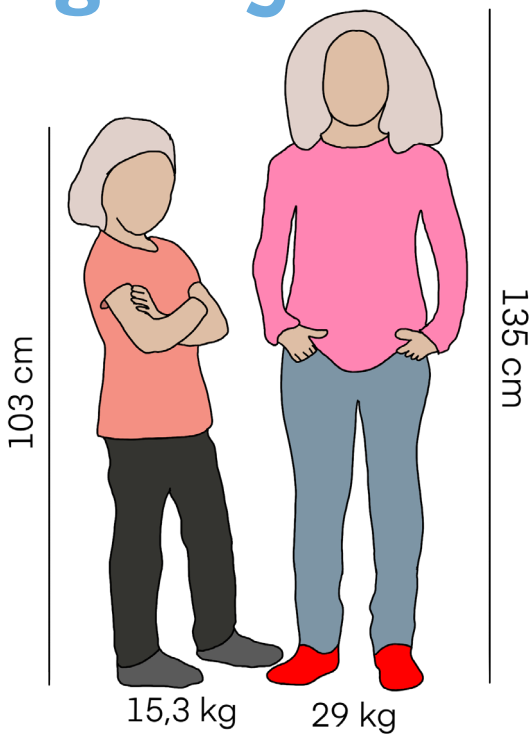

Ill. 19 - Size

Market Research

When designing a new product it is always important to ask if it is necessary to do so. This makes it critical to look at the scale and current solutions on the market and why these might not be sufficient. With help from insights gathered in previous sections, the focal point for this market research has been solely on children's toys for gross motor skills development. This has been narrowed down to three parameters. These are whether it is for children between the ages of 5-7, whether it is an indoor product, and whether it is digital.

Those parameters already present a wide spectrum of products for a variety of ages and purposes within gross motor skills development. This makes it relevant to examine them independently from each other, focusing on their functionality and opportunities, which in turn could reveal a gap in the market.

The market of indoor gross motor skills toys

Within the market of indoor toys for gross motor skills development, there is a large representation of toys. Most notably it is the likes of Gonge (Winther A/S, 2024) (Ill. 21) and Modu (MODU ApS, 2024) (Ill. 20) but also BObles (bObles, 2024) (Ill. 22) that are particularly popular due to their versatility and their playful nature, but they are usually also easy to tidy up after playtime. Particularly Modu and BObles use modular platforms with building blocks that can be used when building obstacle courses, vehicles, etc.

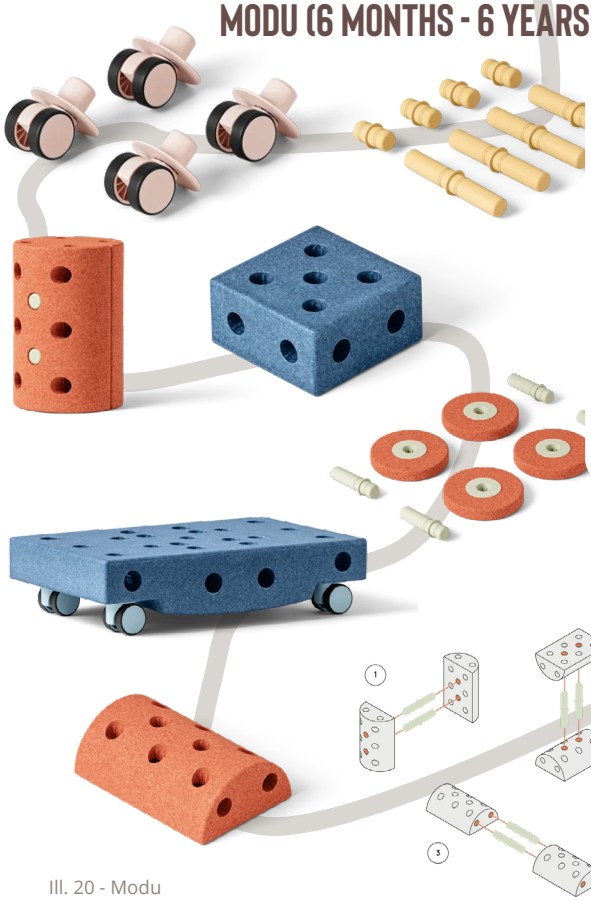

Ill. 20 - Modu



Ill. 21 - Gonge



Ill. 22 - BObles

GROWING PRODUCTS

These products are designed with a **large span of ages in mind making them products that you can grow up with,** in the area of around 0-6 years. In some instances, they even become **products that you can grow old with as seen in some of the products from Gonge.**

The market of gross motor skills toys for children aged between 5-7

A few of the principles that emerged from the first category are still apparent within this category, with the likes of obstacle courses from Gonge, for example. But there is a new tendency between toys or, in this case, tools, as the majority of the products in this category are designed for either outdoors or activities like sports, which already represent massive Red Ocean markets (Ill. 23). This effectively also leaves a gap within the indoor market for this specific age group.



Ill. 23 - Gross motor skills toys

The market of digital gross motor skills toys

Within this category, the main principles that can be extracted are from gaming-like console experiences called exergames. These are found in the likes of Nintendo Wii/Switch, Playstation VR etc. but there are also instances where the experience has been taken to new heights with e.g. Exergame Fitness which essentially can be referred to as interactive fitness equipment (Ill. 24).

The unique principles found throughout these products are their ability to adapt. This means that they can be used to assist in training gross motor skills in almost endless different ways. It also means the experience can be adapted to the children's age through the choice of e.g. game and activity, though an exception might be the VR products. Most of the games for this platform are mainly made for children who are at least 13-14 years or older. Meta and Sony even state that their VR products should not be used by children below the age of 10 and 12 respectively (Meta, 2024), (Sony, 2024). This is mainly due to the children not understanding how to distinguish between the virtual world and the real world, but also due to the underdeveloped state of a child's body which means the product physically and psychologically can lead to strong and unhealthy reactions from the child. Meta even states that their VR headsets should not be perceived as toys.

The other products like the Nintendo Wii and Switch are more gentle entry points into the world of exergames as they are less invasive alternatives where the virtual world is more disconnected from the child. However, training gross motor skills using these devices might not stimulate the three primary senses that are important to developing gross motor skills in the first place. This is because these devices typically are operated with your arms and hands while watching a screen. While being an active solution it often still causes the entirety of the body to be stationary. This presents a situation where the body is not exposed to any changes in either posture or the physical environment it gets to touch. Even if possible it might still be favourable for the child to play the game in a stationary manner although it does not help them train their gross motor skills. This makes training a choice rather than a necessity which could prove to become a problem for consistent training of gross motor skills.

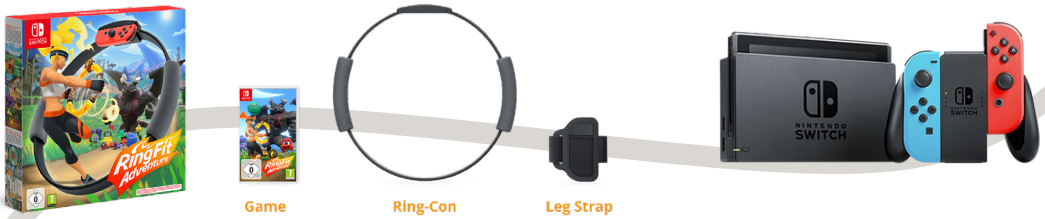

Ill. 24 - Digital motor skill toys

Use of Digital Media for Training Gross Motor Skills

As stated above digital media have some unique features that could enhance the play experience for children, when applying it into the context of rehabilitation. Generally, there was a mixed perception of screen time amongst the parents when they were asked on the second visit to LEO's Legeland. When enquiring about who initiated screen time it was very situationally depending. Sometimes the parents needed a break and other times the children had just become accustomed to having it as an option, so it had become one of the main sources of entertainment (App. 10). The use of digital media is not necessarily bad or good. The increased use of screens among young children has improved both their speaking and spelling abilities in English (Kokkegård, 2014). This means the main focus should be on how children use and engage with the screen through active consumption (App. 11).

The main problem with the screen however is when children consume media passively. This is when the benefits of screen time are removed. Through an interview with Mette, co-ordinator at Dantoy A/S (App. 12) it was also evident that too much screen time could cause both a loss of imagination and mood problems if not regulated properly.

In all looking into the pros and cons of a potential choice about whether screens should be a part of the product proposal or not the following pros and cons list was produced see App. 11. The list is based on the information about what screens can do to either benefit or "damage" the child. After all, it is important to know that as long as the parents keep a healthy screen schedule, most of the cons will disappear. (App. 11)

Through the research, It is apparent that there are different opinions on the topic of children and screens. There is a part of screens that can be damaging for children if they are consuming the media passively, but they could also provide a potential product that encourages fun and exciting experiences for the user. (App. 11).

The potential of moving in a digital direction can also be backed by research from the Danish Health Authority (Sundhedsstyrelsen, 2023). It shows that the usage of digital products is increasing for children even at an early age wherein 2009 29% of 3-year-olds already used screens for more than an hour a day and in 2021 this number had risen to 52%. According to the research, both the percentage and hours of usage increase as children grow older, emphasising that there is great market potential for implementing a digital solution into the product proposal.



Ill. 25 - Ronny & Stine



Ill. 26 - Søren & Kathrine

To get the parent's perspective of a rehabilitation program involving the screen, the following question was asked when visiting LEO's Legeland: "Would you consider it screen time if the screen was used as part of a training program?"

This resulted in responses like:

- "It is okay to be part of a training program—we have to introduce the screen at some point, so it is okay if it is part of a training program."
- "No, we don't consider it, it depends on how the children take it"
- "Wii needs a lot of space" (App. 10)

Based on the data collected and the responses the following insights were collected:

- Screen time is okay as part of a training program.
- Space can be an issue when interacting with exergame-like products.

ACTIVE DIGITAL MEDIA CONSUMPTION

INCLUDE AN ACTIVE PHYSICAL PRODUCT

FRAMING OF MARKET POSITION

Through the ongoing research till this point, it has been made possible to put up some delimitations on the project. Especially regarding indoor toys for the specific age group of 5-7. This comes from the fact that children usually change radically at a rapid speed because of their age and interests (see section "Children's Size and Longevity"). This often means that one toy cannot keep up. Typically it becomes redundant to them when they become older, even if the toy is designed for multiple ages. Adding to this the market for 5-7 year olds mostly consists of tools for outdoor activity which indicates that play requires increasingly more space as they become older. Together it presents an opportunity for an indoor toy that is catered to 5-7 year olds. In this regard, it would also be beneficial to investigate the aspects of creating a digital toy that trains gross motor skills due to the digital world's expanding popularity.

The Paradox

The main paradox being worked on for this project is the ability to maintain consistency in training gross motor skills.

The only solution for improving poor gross motor skills is to challenge and stimulate the children's motor skills through consistent training. There is however a tendency for patients in rehab to lose motivation and consistency to keep up with the task and exercise provided by the professionals.



Ill. 27 - The Paradox

MAIN OBJECTIVE

Main object of the design is to keep the patients motivated to improve their lack of motor skills.

Current Customer Journey

While using the product, customers are on a journey to improve their motor skills. This journey needs to encourage them to do so, which is why the Customer Journey has been studied. The Customer Journey Matrix consists of the following: routine, Joyride, Odyssey, and Trek. The journey studied primarily for this project is a Trek Journey See App. 13.

"*To create the goal-posting that a trek demands, partition the customer's long-term objective into a series of much shorter term goals and reinforce the customer for achieving every small target. Fitbit, for instance, reminds users to take walks throughout the day and rewards them with badges, check marks, or progress icons when they do.*"

- Ahir Gopaldas and Anton Siebert (Siebert & Gopaldas, 2022)

PROVIDE SELF MOTIVATION

Initial Design Brief

Introduction

This project explores the notion of designing an indoor toy that allows children to train and develop their motor skills in a safe environment: The Home. The Home and solo play are important focus areas in this project, as they allow for minimal parental involvement and thereby create downtime for the parents.

Problem Statement

The goal of this project is to design a tool that can help children in the 5-7 age group at home who are having problems with their gross motor skills.

Aim

To ensure that children have a positive association with rehabilitation by providing them with a fun and playful alternative.

Target Group

Children at the beginning of preschool (age 5-7) who have been diagnosed with DMCD.

Context

To ensure that the children have a positive association with rehabilitation the exercises need to be performed in the safety of their homes.

Initial Requirements

Through an initial clustering of insights (App. 14) and a review inspired by Ulrich and Eppinger's method (Eppinger & Ulrich, 2016), the currently discovered requirements have been compiled and ranked on a scale of 1-5, where 5 represents the most important requirements. Wishes will be represented with a score of either 2 or lower.

No.	Need	Imp.	Units	Reference
1	Activate cognitive thinking	3	-	How to Improve Motor Skills, p. 11
2	Promote play rather than work	5	-	Theory of Play, p. 13
3	Include digital media	2	-	Observations of Play, p. 14
4	Function in an indoor setting	5	-	The Stakeholders, p. 12
5	Active digital media consumption	2	-	Use of Digital Media for Training Gross Motor Skills, p. 17
6	Include an active physical product	4	-	Use of Digital Media for Training Gross Motor Skills, p. 17
7	Activity and stimulation of the primary senses for 30 minutes a day	5	Min.	How to Improve Motor Skills, p. 11
8	Provide self-motivation	4	-	Current Customer Journey, p.
9	Provide solo play	5	-	Independent Play, p. 13

Ill. 28 - Delimitation

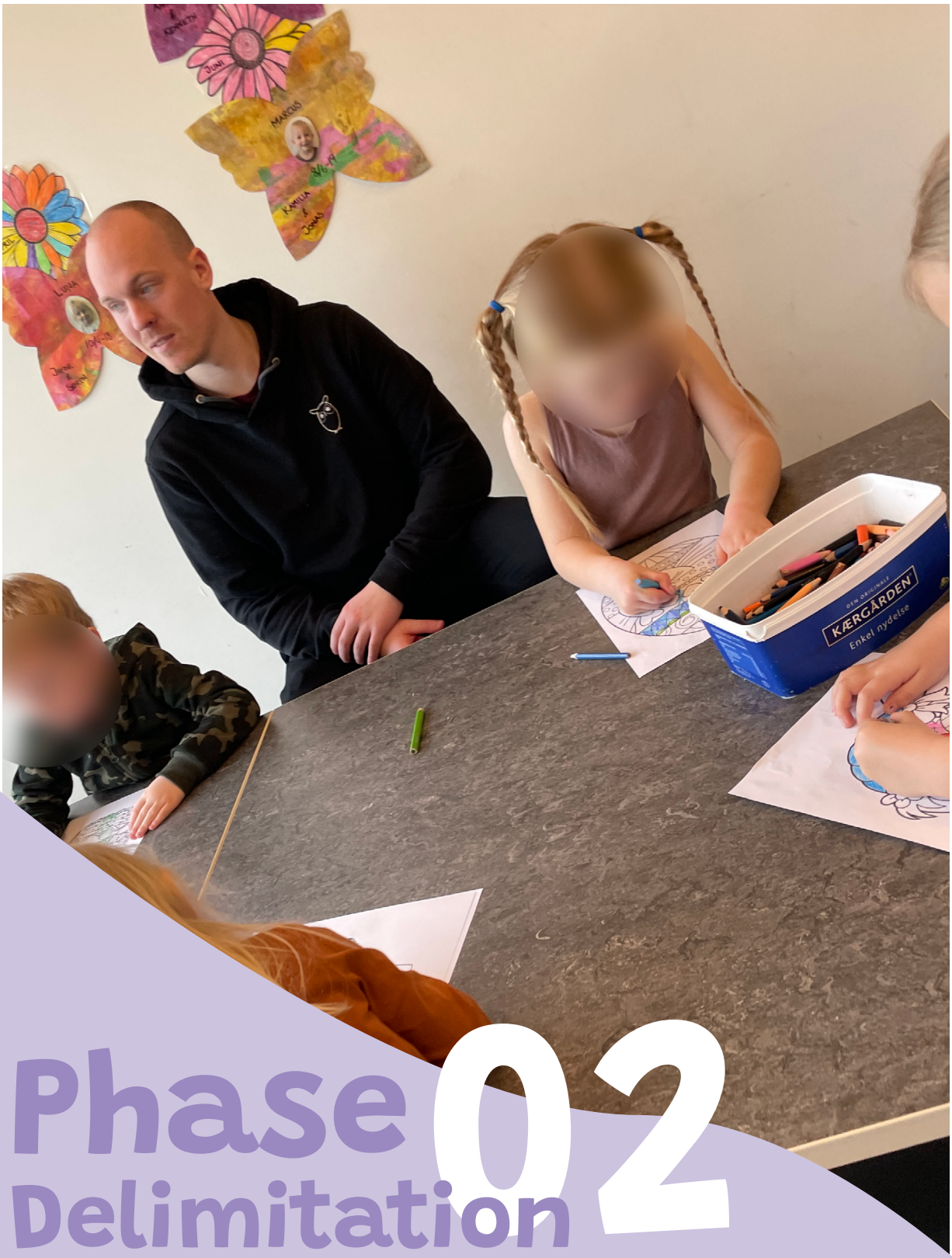

Phase 02
Delimitation

This phase seeks out the theory behind the sense of balance and hereunder the vestibular system due to its importance for developing gross motor skills. With this the aspect of how gross motor skills are trained, putting theory into practice. This includes testing and field trips including the main stakeholders of the project. These investigations will limit the project scope and set up the success criteria that must be achieved.

The Vestibular System

It was earlier discovered that the sense of balance driven by the vestibular system was essential to developing gross motor skills. Therefore, research has been made to explain the Vestibular system's function, the scale of problems it can cause, and finally, how to train it.

Explanation

The vestibular system (Ill. 29) is the balance organ in which the balance works with the eyes to understand the location and sense of room in perspective to what is observed. The vestibular system is found in the inner ear and consists of:

The Semicircular Canals: Endolymph fluid moves inside the canals when the head moves. The fluid is then detected by the ampulla, which is the sensory receptors of the vestibular system. Movement is detected in three different axes, that correspond with the three following semicircular canals:

- Anterior Canals (Forward Roll): This canal detects the movement of the head when nodding and when making a forward roll.
- Lateral Canals (Spinning): This canal detects the movement of the head when moving the head from side to side and when spinning around.
- Posterior Canals (Cartwheel): This canal detects the movement of the head when moving the head to touch one shoulder or when performing a cartwheel.

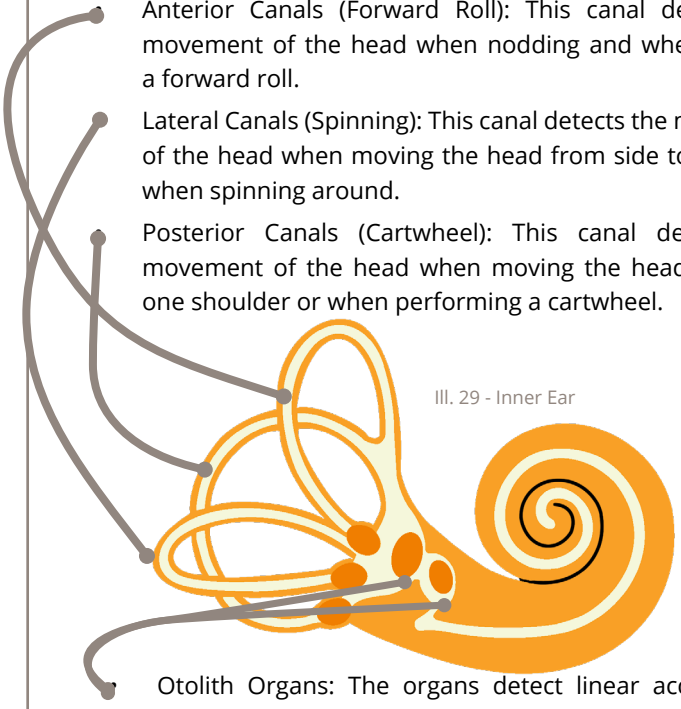

Ill. 29 - Inner Ear

- Otolith Organs: The organs detect linear acceleration, gravitational forces, and head-tilting movements. (NEUROSCIENTIFICALLY CHALLENGED, 2024)

SHIFT OF FOCUS

The main focus of this project has been chosen to stimulate the semicircular canals, which are responsible for sensing the head's direction relative to the body's centerline.

Depending on the tilt of the head different canals are being affected. The sense of direction that is being picked up by the balance organ should align with what is being visualised by the eyes. If these two observations communicate different things to the brain people will experience motion sickness. This is because the brain tries to communicate to the rest of the body that something is wrong. This essential neurological communication is happening constantly and is a crucial factor for developing motor skills. (UMMC Health Care, 2024)

The Scale

Statistics from an American study made in 2012 by the National Center of Health Statistics (NCHS) covering 10954 children between the ages of 3 - 17 further emphasises the scale of vestibular/balance problems (App. 15). It shows that the prevalence of dizziness and balance problems in children within the USA alone was 5,3% at the time of which 58,5% reported that the issues caused problems in their daily lives, such as home, school, or recreational activities. It also showed that these balance problems would increase with the children's age after turning 6-8 years. Similar numbers from other countries in the study like the UK, China, and Finland indicated the same conclusion, but also that training the vestibular system from an early age is essential to its development.

How to Train

If people have problems with their vestibular system, they will usually experience motion sickness and dizziness. The most important thing is not to be afraid of the dizziness that comes with poor balance. The only way to build up tolerance in the brain is to slowly but regularly stimulate the vestibular system, causing a state of dizziness. This should be trained until the dizziness no longer occurs or is a problem for the individual (UMMC Health Care, 2024).

The way to train the vestibular system is by making movements that rotate the head in the three axes (Ill. 30)

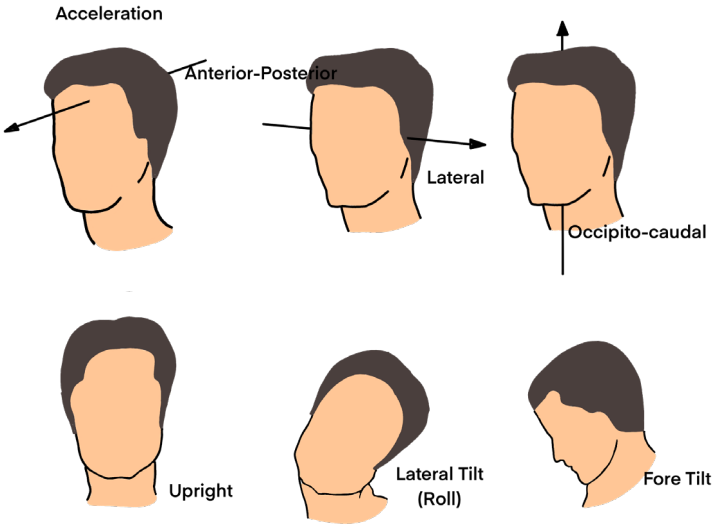

Ill. 30 - Traning

Motivation and Children's Play

Due to the issues regarding the consistency of training motor skills, it was obvious that more practical data about children's play was needed to see if the theory corresponds to observations from reality. The aim was specifically to observe what motivates and is fun for children. Therefore a visit to Blåkildevej kindergarten (Børnehuset Blåkildevej, 2024) was arranged (App. 16).



Ill. 31 - Obsticle Course



Ill. 32 - Jumping from table



Ill. 33 - Making a cave

Observations from Blåkildevej Kindergarten

Initial observations at the kindergarten showed a great social aspect where almost all of the children played together. They were fond of building caves and obstacle courses that would be used for play afterwards (Ill. 31). But stuff like climbing tables and jumping onto a mattress was also a big hit (Ill. 32). Even simpler things like just spinning around themselves and running brought great joy to the children. Common for most of these types of play was that very little initiation from the adults was needed. It was more of a "go do that" or "try this", and the children would promptly do so and become absorbed in the play until told otherwise.

The children showed particular interest in games that presented them with a challenge they had to overcome, like the obstacle courses. However, it also became apparent that while on the obstacle course, some of the challenges, such as the forward roll, were skipped or altered if the children were uncomfortable with them. This resulted in the pedagogues having to sit by the mattress where the forward roll was performed and help most children with the exercises.

With the help from the pedagogue, all of the children now did the forward roll and also found the exercise fun. This was the push they needed to keep on trying.

One of the especially interesting scenarios was the children jumping from a table and down onto a mattress. In this scenario, tables of different heights were placed next to the mattress. This gave the children the option to start the challenge from a lower difficulty and slowly advance to the higher table when they became more comfortable with the exercise. From this point, they even became comfortable performing tricks while jumping, increasing the difficulty level and fun factor further.

This showed that a simple set-up like a table and mattress could encapsulate a game with level progression. The children also challenged each other to do different tricks, which also helped them push each other to do better and move out of their comfort zone. This indicates that setting up the product proposal for multiplayer compatibilities can have positive outcomes.

COMPATIBILITY WITH DIFFICULTY SCALING

~~PROVIDE SOLO PLAY~~

PROVIDE SOLO PLAY AND MULTIPLAYER PLAY

The Pedagogues on Theory of Play

When comparing the different theories of play from page 13 to what the pedagogues observed in the kindergarten, it became clear that “Games with Rules” had its obstacles in a social setting. When engaging in, “Games with rules,” or in this case, competition, the children tended to get sad and feel left out if they could not do the game or were unable to perform well, resulting in them placing last. It could result in their confidence taking a hit and the pedagogues having to ensure they perform better in other activities. The continuing problems with competition-based games have resulted in the pedagogues not suggesting these kinds of games to the children.

The Playground

When observing the children playing outdoors at the kindergarten, it seemed like a natural way for them to train their motor skills. However, children with poor motor skills simply did not participate in plays where their motor skills were challenged. They also did not tend to challenge themselves and would only participate in games they were good at. This suggests that the children are solely responsible for engaging in the game individually.

While participating and interacting with the children during outdoor playtime, it became apparent that the best toys could switch contexts. This was especially obvious when comparing the two slides available to the children on the playground. As seen in illustrations 34 and 35 the most popular slide among the two was the yellow and green plastic slide, which was smaller than the metal slide. This slide was considered more fun because the children could move it around and use it in different contexts, settings and games.

Ill. 34 - Big slide





Ill. 35 - Small slide

CAN FREELY BE MOVED TO DIFFERENT LOCATIONS DURING PLAY

THE IDEAL PLAY SITUATION FOR A REHABILITATION GAME

The ideal situation would be for the person in charge to suggest a game and then have the child start performing the game by itself. If they lose confidence in performing an exercise or challenge, intervention and acknowledgement from a parental figure would be ideal to help them overcome the exercise. This would also fit well within the trek journey, where progress and goal-posting are monitored to keep up the motivation.

~~PROVIDE SELF-MOTIVATION~~

PROVIDE ACKNOWLEDGEMENT FOR OVERCOMING CHALLENGES

Interview with Gitte: Motorikterapi

While searching for an optimal concept direction, it was chosen to get a professional assessment, which developed a general idea of things to look out for when designing products that should train the vestibular system. In this regard, physiotherapist Gitte Randorff Harrebek (Ill. 36) from "Motorikterapi" (Sofiendal Sundhedsteam, 2024) offered her help and insight (App. 17).

Ill. 36 - Gitte Randorff Harrebek



Ill. 38 - Flyer

Postural Control

Generally, when talking with Gitte it became clear that the initial approach to the project had been a tad limited, with the sole focus of only aiming to train the Vestibular system. Gitte explained that the Vestibular System or in other words, the sense of balance only accounts for one side of the issues that occur when talking about the development of gross motor skills. She elaborated by describing the importance of training the muscle-joint sense and the sense of balance, which together is called the body's postural control. This postural control is responsible for keeping one's body upright against gravity and is practically the two senses working together. They counter the forces that might cause the body's centerline to be out of angle, causing one to fall over and causally making the Vestibular System overreact (Ill. 27).

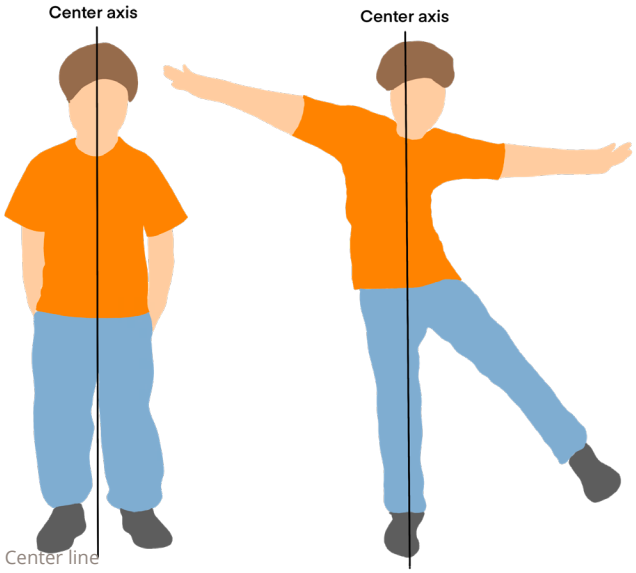

Ill. 37 - Center line

Gitte handed out a flyer (Ill. 38) emphasising how and when postural control should be trained. It contains 3 levels of training, each with a focus on training a new semicircular canal for every level, meaning:

- Level trains the lateral semicircular canal by doing **rotating** exercises in **swings and tumbletops**.
- Level trains the posterior semicircular canal through **sideways rolling exercises on the ground**.
- Level trains the anterior semicircular canal by doing **forward rolls on the ground**.

Gitte noted that all these exercises should be trained by a minimum of 5 minutes thrice daily.

~~ACTIVITY AND STIMULATION OF THE PRIMARY SENSES FOR 30 MINUTES A DAY~~

POSTURAL CONTROL STIMULATION MINIMUM 15 MINUTES A DAY (5 MIN. X3)

User and Context

To design a product for children to use at home, it has been essential to examine this exact context (App. 18). In this regard, observations of how much space there is for play and play equipment, as well as insights into where and how this happens, have been the main focus points.

The Context

The home - Worries and Play Size

Looking into context it was realised that in some homes the children's rooms are not that large (Ill. 39). Initially, the product should have been placed in a child's room, but further research proved that many parents let the child play in the living room because it has a bigger space (Ill .40)

"We mostly play in the living room because of the available square meters. (Rasmus WS 02.08)"

MUST FIT WITHIN THE LIVING ROOM

It was also found that when parents let their children play in the living room, it is important that the product does not cause unnecessary damage to the surroundings including furniture, walls, ceiling, floor, and everything in between.

AVOID DAMAGE TO FURNITURE AND INTERIOR DECORATIONS

The parents - Set up

One thing is the play size and how much space the play equipment needs. Another is how much time the parents would need to put into the product to start the play for the child if the product's complexity would not allow children to start it themselves. In this case, the parents agreed that it was nice to be able to start the product within 5 to 10 minutes.

SET UP AND CLEAN UP TIME 5- 10 MINUTES

It was also crucial for the parents that the product proposal could be put back into a box or corner within 5 to 10 minutes, essentially getting it out of the way and reducing clutter. This applied to both the living room, kitchen, and connecting walking areas.

"As long as it can be packed away and it's not on display all the time" (Christina WS 02.08)

"The toys are allowed to be in the living room as long as they are not messy" (Rasmus WS 02.08)

REDUCTION OF SIZE WHEN NOT IN USE

Ill. 39 - Child room





Ill. 40 - Living room

Personas

Two personas are set up to describe the user groups in more detail, clarifying their needs and situations. They will be based on existing user insights and observations to describe the user for whom the product proposal should be made. The first persona covers the children while the second covers the parents.

Primary User: The children

Children are represented as the primary users and are deeply dependent on their parent's choices and behaviour.

Mia is a 6-year-old child, who has just started preschool. She has enjoyed starting school with all the new experiences. Luckily for Mia, she started preschool with one of her best friends, so the experience was not as scary as she had thought. She has lots of friends and plays with them during recess. However, she cannot actively participate in all the activities due to poor motor skills, which has been an issue she was already used to from kindergarten. So she either chooses not to participate in the games difficult for her or tries suggesting something else that the children can play together. Mia has lost confidence in her abilities when participating in games because she is bad at them or always comes in last place due to poor performance.

Mia's poor motor skills were discovered during her health check when she started preschool. The school puts in extra notice trying to improve her abilities during PE, but this effort does not result in sufficient improvement. The school then sent her to a specialist in physiotherapy where it was discovered that Mia was having problems with her postural control: a combination of her sense of balance and muscle-joint sense. This means Mia is to train with the physiotherapist once a week while exercising daily at home. Mia and her parents start with being good at doing the training, but it slowly becomes tiresome and the motivation is lacking. Mia is also not finding the training fun anymore and tends to become mad and irritated when she has to do her exercises. She also does not understand why she is the only one doing the training... What about her sister? All of this results in bad association with the training, which results in it not being performed at home.

Secondary User: The parent/s

The parents are represented as secondary users, but they are also set to be the buyers of the product. This means the product should fit their needs.

- Parents to the children with poor motor skills

Laura and Henry are Mia's parents. They have always known that their child was a bit clumsy but did not consider it a big problem. Their child has a lot of friends and is very social, but they are aware that their child generally performs poorly in sports.

They are taken aback when they figure out the results and do not know what to do next. They do generally not perform much sport and are not the best at getting their children outside. The parents do not like their children being outside unsupervised as they cannot ensure they do not get hurt. The problem with this though is their limited time. They both have full-time demanding jobs and are generally exhausted when they come home from work. However, they still have a lot of housework that must be done before the day ends. This is why both children have an iPad. This allows the parents to have a break to take a time out or do other things around the home.

They are now getting used to their new life, which includes training their oldest child's postural control for 15 minutes a day. The exercises are not performed every day due to the parents' lack of excess energy on some days, and their child does not always want to do the exercises either. This has made the training requirements tedious, often resulting in arguments to get the training done, further draining the parents' energy. They are currently desperate for a better solution.

User Scenario

To clarify the problem and in what situations it occurs a user scenario has been made (Ill. 43). It reflects the users' busy life on an average weekday and how it sometimes can be difficult to fit in physiotherapy with all the things the parents have to accomplish before the time reaches the children's bedtime 7 PM.

1



The children are picked up from school and are ready to go home.

2



The children are doing an activity at the dining table while the parents are making dinner.

3



The parents are making dinner, while being able to watch their children at the dining table

4

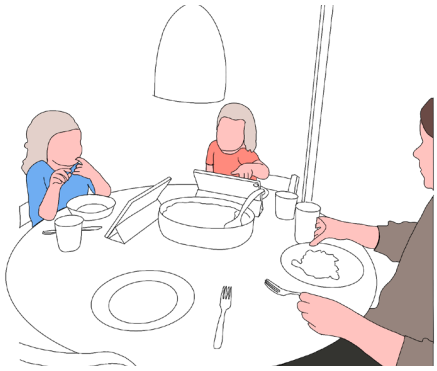

The children are entertained by their tablets, while having dinner to give the parents down time.

5



The kitchen is being cleaned up after dinner, while the children are watching entertainment on their tablets.

6



This time is also used to vacuum the home and doing other things around the house.

7



The children are tired of using their tablets and are doing other things at the dining table where the parents are able to watch them.

8

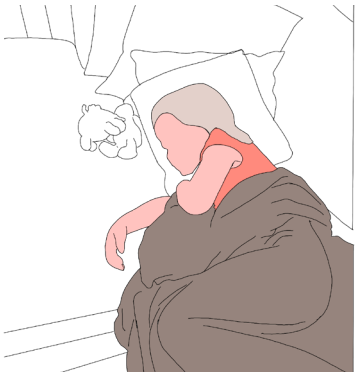

The children are tired after a long day and are put to bed around 7 PM

Ill. 43 - User scenario

Testing out Equipment

During the visits at Dorthe and Gitte, both experts had equipment at their training facilities, which trains motor skills (App. 19). To get a feeling of the different exercises a few experiments were put into action in search of a better understanding of how postural control could be challenged. In this case, the test was focused on uneven/dynamic surfaces. This included a test of a Bosu Ball at the DGI Center at Nordkraft, Aalborg (App. 20). Additionally, it included the test of a prototype originating in the game Twister, but with an uneven surface underneath the mat to make it more challenging (App. 21).

Ill. 44 - Bosu Ball 1



Ill. 45 - Bosu Ball 2



Bosu Ball

The Bosu Ball is a fitness and balance equipment with a hard base and a soft top. This creates an uneven and unpredictable base where balancing and a combination of static and dynamic strength are key to staying on top (Ill. 44). The Bosu Ball can also be flipped with the hard base on top to create a different challenge where the balancing challenge becomes more predictable (Ill. 45).

A chart containing the experiences with the Bosu Ball is listed (Table. 01)

Bosu Ball - standing on the soft top	Bosu Ball - standing on the hard top
Struggling to stand still and keep balance.	It was a lot easier to stand on the ball this way.
When moving, it was easier to stand on it.	The hard side provided a lot of stability.
Realising that the Bosu Ball product was exceptional to provide balancing challenges and improve at it.	It felt a lot more steady, and it was not difficult to balance on top of it.

Table 01 Bosu Ball testing

The hands-on experience field trip gave a deeper understanding of how challenging a soft surface was. This changed the perspective of how the soft surface could be a part of a potential product proposal. The soft surface also corresponds with findings about the muscle-joint sense (CF. phase 1, How to Improve Motor Skills) in which the joints and muscles must be stretched to function correctly.

CONTAIN A DYNAMIC SURFACE

Ill. 46 - Twister 1



Ill. 47 - Twister 2

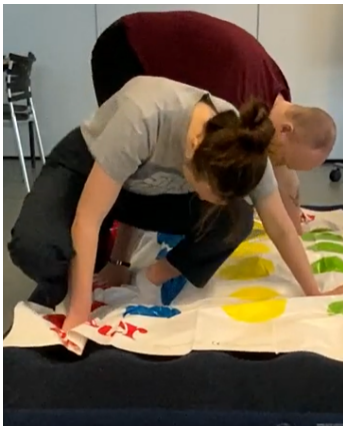

Twister

From the Bosu Ball test, an idea surfaced to combine the concept of its uneven surface with the game Twister, which was already thought to be challenging for postural control due to its promotion of difficult positions. To make a rapid prototype of the concept, a two-person air mattress and the Twister game were bought.

Firstly the properties of the original game were tested (Ill. 46) then secondly it was combined with the air mattress to introduce the feeling of an uneven and unsteady surface to play on (Ill. 47).

A chart containing the experiences with the Twister experiment is listed (Table. 02)

Twister on the floor	Twister on the air mattress
The game was easy on the floor	The game felt a lot harder
Movement was non-problematic	Movements were problematic
No problems keeping balance	Problems keeping balance
Not hard for muscles and joints	A lot harder for muscles and joints
Challenges all the semicircular canals	Challenges all the semicircular canals

Table 02 Twister testing

The test provided an understanding of how big the difference can be between a static and dynamic surface. The dynamic surface of the air mattress provided a bigger challenge making it hard to keep balance mostly because of its effective impact on the muscle-joint sense. Additionally, all semicircular canals were challenged as the head had to be oriented for the different positions.

Due to the potential seen in the test, it was decided to explore the Twister concept and uneven surfaces further.

Concept Direction Exploration

With the current accumulated knowledge on play and stimulation of postural control, it was decided that ideation was the next step. The aim would be to create different concept directions catering to both aspects. The concept directions created would then be used to gain feedback and confirmation from professionals and parents. This approach would make it possible to choose a direction for further research and developing the play factor for the children.

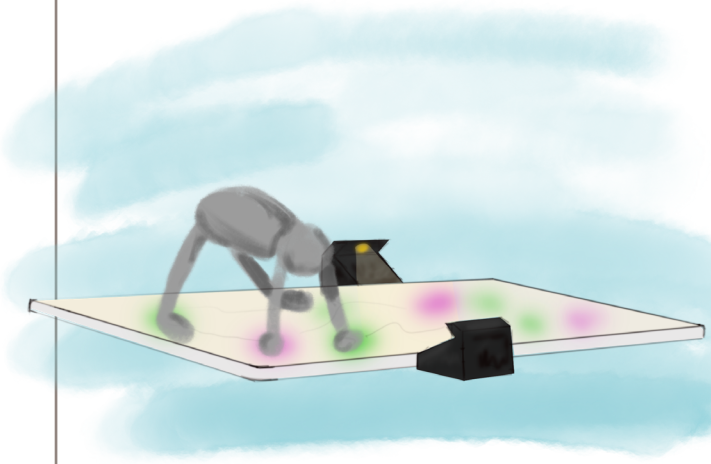

Light show

This is built upon the idea of the Twister game but is more challenging.

Instead of the traditional hard surface Twister this variant contains a soft surface which challenges postural control more than the conventional variant.

The game functions by projecting hand or foot placements. It also includes a speed setting that slowly challenges the body's position, forcing it to lean faster and tilt the head faster.

Ill. 47 - Light Show

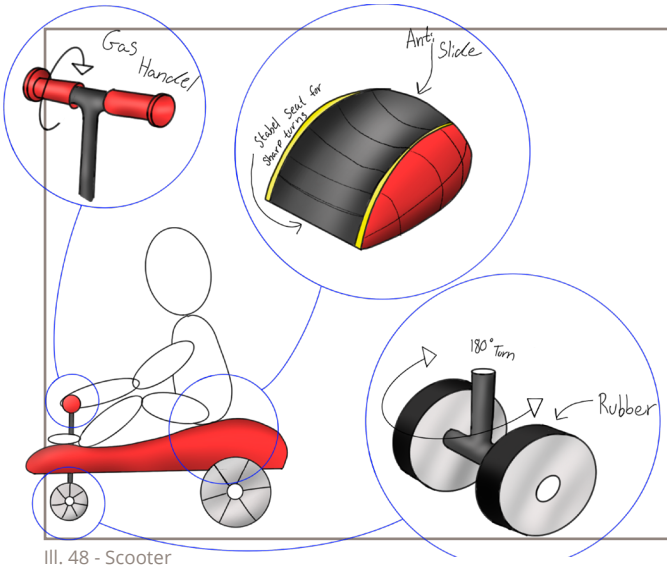

Scooter

This is based on the idea of an indoor vehicle. It has a motor added to it and a screen.

The gas handle teaches about fine motor skills while the user needs to perform the same level of spins and turns as seen through pop-ups on the screen while driving.

Ill. 48 - Scooter

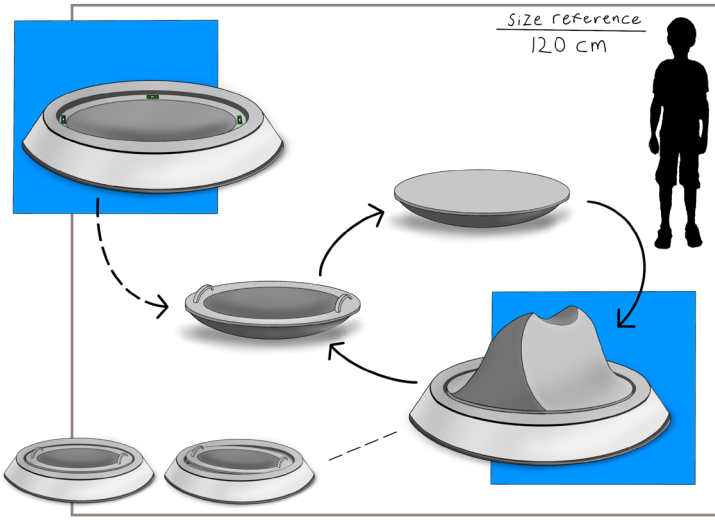

Full Body Thumbstick

This stationary piece of equipment acts as a full-body controller for video games.

The children can rock back and forth and side to side with multiple tilt angles. This challenges children independently of their skill in both stability and how quickly they can change positions.

Ill. 49 - Full Body Thumnstick

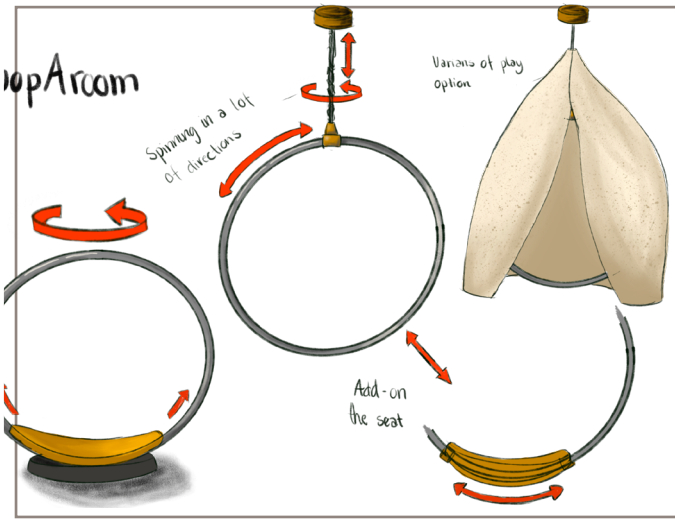

HoopAroom

HoopAroom is built with inspiration from the aerial hoop sport.

With this equipment, the child can turn and twist in multiple axes, thereby being challenged in all the necessary ways to develop good postural control.

To do this the seat can slide back and forth while the hanging point or included base acts as an anchor point for turning the ring around its center point.

It can also be used as a swing while the children twist and turn.

Ill. 50 - HoopAroom

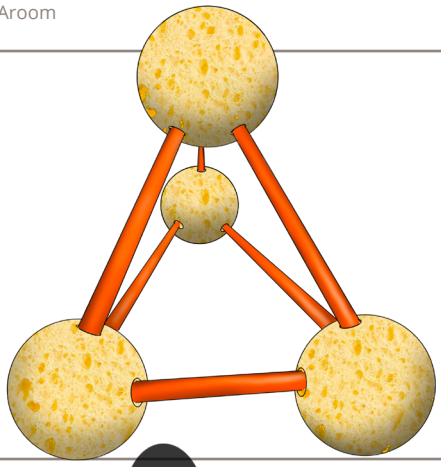

Foam Structure

This product is based on a “build yourself” idea.

It is thought to be made with metal or wood sticks that will be put into a foam ball.

It would challenge the child’s imagination when building structures. When they want to climb into the structure it will also challenge their postural control as the foamy base would make it wobbly and challenging to stay on.

Ill. 51 - Foam Structure

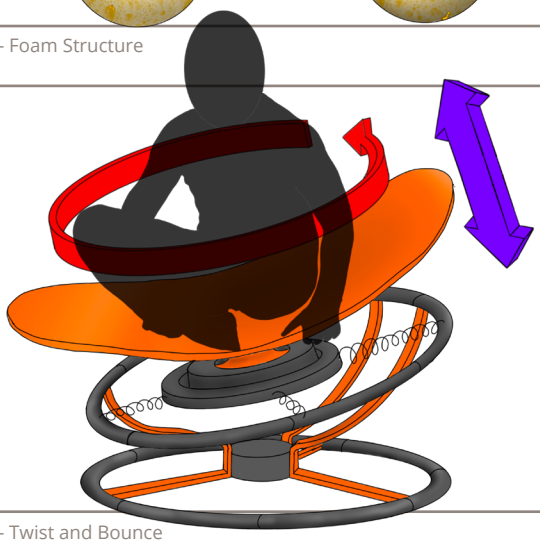

Twist and Bounce

The Twist and Bounce concept is based on knowledge gathered from visiting Blåkildevej Kindergarten. It seeks to build on an existing product that only turns around its centre axis while the child sits on top.

In this case, the product’s seat is tilted, which means the child can shift their weight to keep it spinning.

The top spins in two directions and the springs attached to the frame make it bounce.

Ill. 52 - Twist and Bounce

INITIAL CONCEPT CHOICE

There was a general agreement that HoopAroom was an interesting concept to explore. This resulted in a brief exploration of the concept, where the aim was to challenge its possibilities and conclusively test its feasibility. This was done through research on components, drawings of mechanical solutions, and the creation of a prototype (App. 22) The next step was then to test the concept so that getting feedback from the customers and primary users would be possible. The concept furthermore needed to be verified by a professional physiotherapist to ensure that the product trains the postural control as it is supposed to.

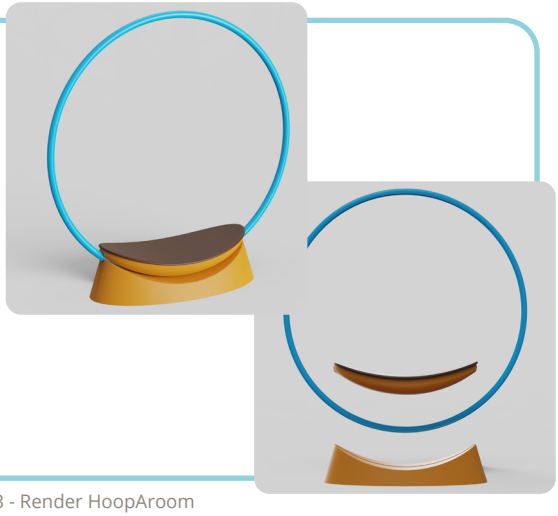

Ill. 53 - Render HoopAroom

Design Brief 2

Through further research and visits to various stakeholders, the project was reframed to focus on postural control instead of only the vestibular system. This pushed the solution space forward and has made it possible to become more specific in the design brief, which has resulted in the following reframing:

Introduction

This project explores the notion of designing an indoor toy that allows children to train and develop their postural control in a safe environment: the home. Home and solo play are essential focus areas in this project, as they allow for minimal parental involvement, creating downtime for the parents.

Problem Statement

How to design a product for 5-7-year-old children which trains postural control at home while encouraging play?

Value Proposition

To create an enjoyable and motivating play experience for the children by transforming the mundane task of rehabilitating the postural control into a fun and social or solo activity, that will keep them on their toes by having progressive difficulty so that they can reach the desired end goal.

Aim

To make the experience of rehabilitating postural control more enjoyable and motivating by offering an alternative product, which focuses on the experience of play and the rehabilitation comes as a bonus.

Target Group

Parents of children who are having trouble with their gross motor skills are searching for an alternative training method that encourages play. This way, the training experience becomes fun instead of taxing and exhausting, thereby creating an unpleasant association with rehabilitation for the child.

Context

To ensure that the children have a positive association with rehabilitation the exercises need to be performed in the safety of their homes and primarly in use in the living room.

Main barriers

The play: Motivating and Fun **Vestibular System: Training** **Context: Living Room** **Parents: Setup**

Requirements

No.	Need	Imp.	Units	Reference
1	Activate cognitive thinking	3	-	How to Improve Motor Skills, p. 11
2	Promote play rather than work	5	-	Theory of Play, p. 13
3	Include digital media	2	-	Observations of Play, p. 14
4	Avoid damage to furniture and interior decorations	3	-	The Context, p. 25
5	Fit within the living room	4	-	The Context, p. 25
6	Active digital media consumption	2	-	Use of Digital Media for Training Gross Motor Skills, p. 17
7	Include an active physical product	4	-	Use of Digital Media for Training Gross Motor Skills, p. 17
8	Postural control stimulation minimum 15 minutes a day (5 min. x3)	5	Min.	Postural Control, p. 24
9	Provide acknowledgement for overcoming challenges	4	-	The Ideal Play Situation for a Rehabilitation Game, p. 23
10	Provide solo and multiplayer play	5	-	Observations from Blåkildevej Kindergarten, p. 22
11	Compatibility with difficulty scaling	4	-	Observations from Blåkildevej Kindergarten, p. 22
12	Can freely be moved to different locations during play	2	-	The Playground, p. 23
13	Reduction of size when not in use	3	-	The Context, p. 25
14	Set up and clean up time 5 - 10 minutes	3	Min.	The Context, p. 25
15	Contain a dynamic surface	4	-	Testing out Equipment, p. 28

Ill. 54 - Phase 03



Phase 03
Concept Exploration

The following phase revolves around choosing a concept direction. This includes feedback from the users and physiotherapist Gitte on the concept directions from the previous phase. Furthermore, a SWOT analysis is made to evaluate the concepts and choose one for further development. Lastly, a problem slicing to define the individual product categories would need to be designed to make this possible.

Concept Feedback

When choosing a concept direction for further development, feedback was sought from the users (App. 23 & App. 24) and physiotherapist Gitte (App. 25 & App. 26). This feedback was then compared and evaluated to understand further what the users and an expert thought about the different concepts. It would then be possible to cross-check if the choice of the "HoopAroom" concept was the right one.

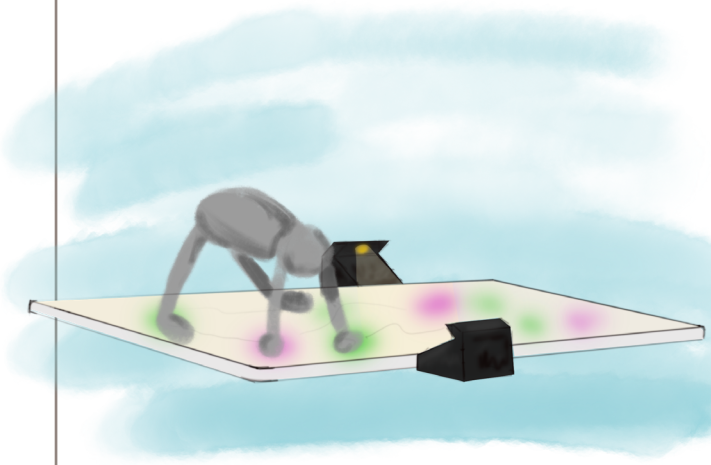

Light show

"*I like the idea that they have to move their bodies in all kinds of ways. And the competition between yourself and the other players is fun.*"

- Leo's: User 2 (App. 24)

"*You get to activate the core, you have weight bearing on all 4 limbs. That core stability. Plus just having your head down and you can work on acceleration and take the focus off what you are actually training*"

- Gitte: physical therapist (App. 25)

Ill. 55 - Light Show feedback

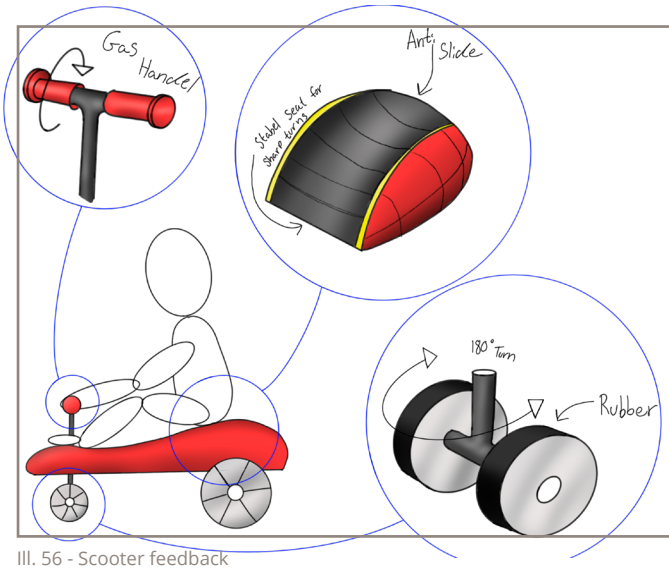

Scooter

Feedback

"*If you can keep the body very stable without having to correct, then you get very close to the isolated balance movement. [...] if you could then change the starting position. Lying on your stomach or sitting*"

- Gitte: physical therapist (App. 25)

"*I am afraid it would damage my interior.*"

- Rasmus (App. 23)

Ill. 56 - Scooter feedback

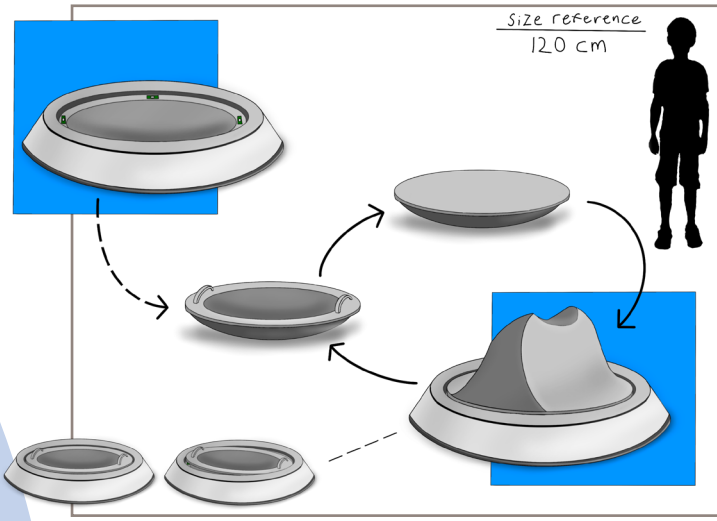

Full Body Thumbstick

Feedback

"*Screen time takes up a lot, so it's great to be able to combine it with the balance exercises.*"

- Rasmus (App. 23)

"*Joint play for parents and children.*"

- Leo's: User 2 (App. 24)

"*Must not take up floor space when it is not in use.*"

- Leo's: User 3 (App. 24)

Ill. 57 - Full body thumbstick feedback

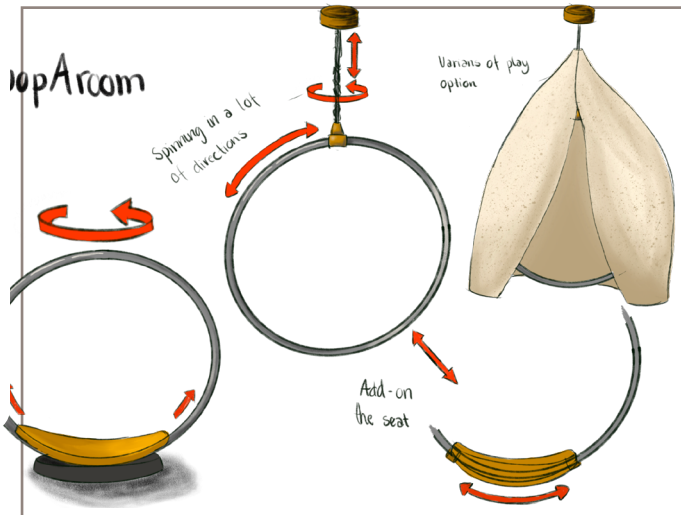

HoopAroom

Feedback

"*It must be able to be packed away maybe a snap hook would be possible.*"

- Leo's: User 3 (App. 24)

"*I am afraid that it could damage my interior.*"

- Leo's: User 2 (App. 24)

"*When you're in something like that, you have to balance your body, but again, you get a lot of vestibular stimulation in something like that.*"

- Gitte: physical therapist (App. 25)

Ill. 58 - HoopAroom feedback

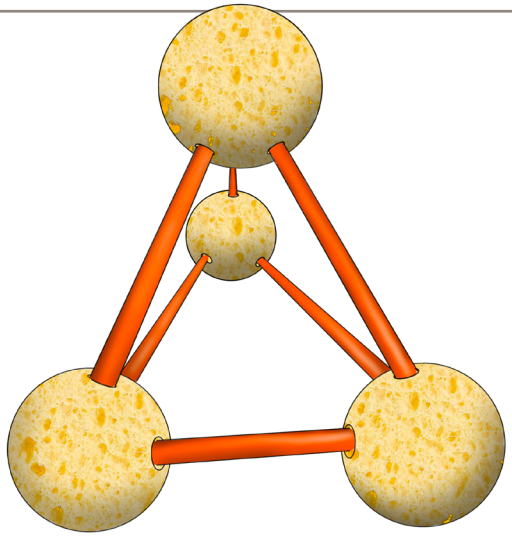

Foam Structure

Feedback

"*I think it looks like it would need a lot of space but the hideout part is amazing.*"

- Leo's: User 2 (App. 24)

"*This would be a good toy for my boy, it would help him take initiative to play.*"

- Leo's: User 2 (App. 24)

"*[...] there is something you can develop on, so if you have a family of children [...] that it is a common play equipment, and it would be possible to expand it so that it caters to both one and the other.*"

- Gitte: physical therapist (App. 26)

Ill. 59 - Foam structure feedback

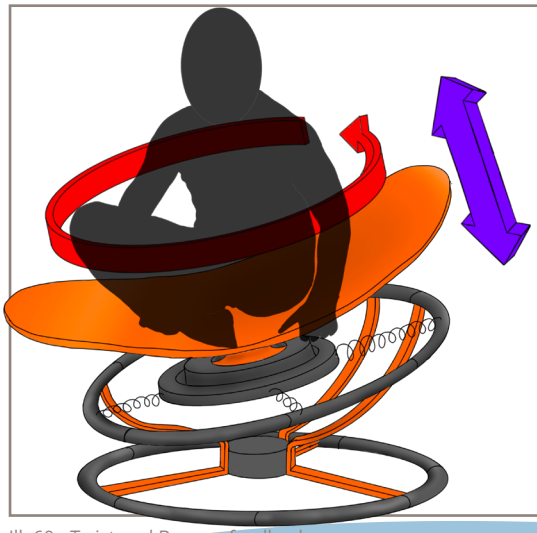

Twist and Bounce

Feedback

"*It is cool, but quickly becomes large to have to stand in relation to the fact that it might not be used that often.*"

- Rasmus (App. 23)

"*I think it is more risky than the others, but it can do what it needs to do. You will both get all these balance corrections, different directions of movement, and things like that.*"

- Gitte: physical therapist (App. 25)

Ill. 60 - Twist and Bounce feedback

The feedback was positive for the different concept directions, but two stood out, “Play Twister” and “Foam Structure.” These two concepts were especially liked because of the ideas behind their interaction and how the challenge of maintaining postural control had been implemented. Furthermore, they were praised for having great options in terms of scalability and the creation of variations.

The physiotherapist, Gitte (App. 25) also emphasised that the “Play Twister” concept exclusively of all the concepts would have the important ability to make the user tilt their head 90 degrees in all axes during use, thus effectively training balance. The HoopAroom concept was also well received by Gitte who saw opportunities for the training aspect with great potential for difficulty scaling. Yet this concept was also looked upon with concern by the parents (App. 24) indicating that it would both take up a lot of space and potentially destroy their furniture and interior decorations. They would rather have a product that is set up on the floor.

SWOT Analysis of Concept Directions

When choosing a direction for further development, the feedback from the former section was taken into consideration while being held up against the design requirements gathered up to this point. This initiated a SWOT analysis where multiple aspects of every concept were compared through their **S**trengths and **W**eaknesses alongside **O**pportunities and **T**hreats. (App. 27)

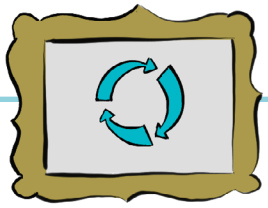

BACKING UP

The SWOT analysis indicated that at least two concepts, “Scooter” and “Twist and bounce” would not be considered going forward because they had too many weaknesses while not complying with the design requirements. Looking further into the analysis, it also became clear that the choice of the “HoopARoom” concept was too hasty and other opportunities in retrospective needed exploration before choosing this direction for any further development.

~~POSTURAL CONTROL STIMULATION MINIMUM 15 MINUTES A DAY (5 MIN. X3)~~

POSTURAL CONTROL STIMULATION MINIMUM 15 MINUTES A DAY (5 MIN. X3)

ROTATE A MINIMUM OF 90 DEGREES IN THE: LATERAL AXIS (CARTWHEEL) ANTERIOR AXIS (FORWARD ROLL) POSTERIOR AXIS (SPINNING)

MAIN SETUP ON THE FLOOR

CHOOSING A CONCEPT DIRECTION

With the SWOT analysis and the concept feedback, a choice could be made as to which concept would be best fit for further development. In this regard, it was clear that the concept fulfilling the most requirements all while being best received by the users (App. 23 & App. 24) and the physical therapist, Gitte (App. 25) was the “Play Twister” concept. This signifies that this concept has the most potential and is therefore selected for continued development.

Gamification

As a core part of creating a motivating and playful experience for rehabilitating postural control while also knowing children are no strangers to screen time, it was essential to look into the aspects of gaming and hereunder gamification. Gaming in itself is very popular worldwide, with 3.09 billion active gamers in 2023 where 20% of these were under the age of 18 which indicates a huge potential. Looking at gamification this can be described as using game-based mechanics like reward systems and aesthetics within the real world as a motivation factor for learning or training (Fadhli, et al., 2019). This is also why the aspect of gamification is especially interesting to this project as it has the possibility of implementing rewards for completing tasks. However, there is also difficulty scaling, making the challenge either harder or easier as needed for the children playing.

"*Rewarding is one of the elements in a game that can be used to attract the attention of children so that they are involved in an activity.*"

- (Fadhli et al.)

To better understand how gamification could be implemented into the product proposal research was made into what games are the most popular for the age group of 5- 7 to find out their working principles (Ill. 61) (App. 28).



Rocket League is a team-based sports game where fictional and non-fictional cars are the players. It features popular games like football, basketball, and hockey where competing is the main aspect. In-game powerups are also present in some game modes to present the element of unpredictability and turn everything around.

- Sports game with cars (symbolic play)
- Competition
- Team-based.
- Power-ups - unpredictability

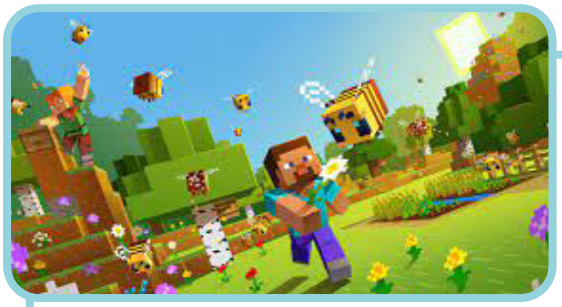

Minecraft is an open-world creative sandbox, where you collect items and materials to build your own world just as you would like. The game contains achievements, story aspects, and large social communities with countless minigames.

- Open world sandbox
- Creativity
- Story and achievements
- Social aspects
- Online mini-games

Ill. 61 - Games for research

SUM UP

These popular games showed that the most reappearing characteristics could be narrowed down to five aspects essential to the gaming experience and could be applied to the product proposal in some way.

- Progression
- Achievements
- Creative problem solving
- Social aspects
- Power-ups



Roblox is a child-friendly game emphasising creative elements where you can play and create your own games.

- Playground of games
- Creativity
- Social aspects



Animal Crossing: New Horizons is an open-world game where you complete tasks and collect items to build up your island. Points are awarded for having the nicest island.

- Open world
- Creativity
- Achievements to progress
- Social aspects



Super Mario Odyssey is a platformer game with story-driven elements that you are urged to explore. It features collection aspects which are utilised for both rewards and progression into new areas. It also features cooperative play.

- Platformer game
- Story driven
- Exploration
- Achievements to progress

Successful Application of Gamification

Research was also made into examples of platforms where gamification has already been successfully implemented for motivation purposes (Ill. 62) (App. 28).



Duolingo ABC is a great example of using gamification to reach educational goals for children. It is an app that encourages you to learn by playing mini-games. The game rewards you when you complete your tasks, motivating you to keep going. It also contains interactive stories and colourful visuals making it an engaging experience.

- Educational goals
- Mini-games
- Rewards for completing goals
- Interactive stories
- Colourful visuals

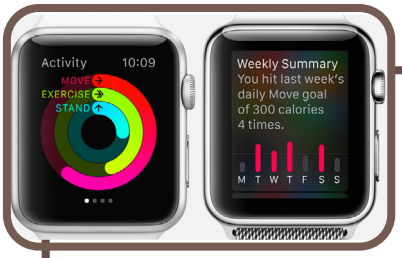

Tracking fitness goals with a **Smartwatch** is a classic example of gamification. It functions as a digital coach urging you to reach daily, weekly, monthly, or even yearly fitness goals. It includes streaks and awards you virtual achievements for achieving those goals.

- Fitness goals
- Achievements for completing goals
- A digital coach
- Streaks

Ill. 62 - Gamification in use

Looking at these examples, gamification can be used as a motivator for doing tasks that are initially not the most appealing by periodically rewarding you or making the tedious parts fun. Also, as it gets you to keep going you will become better at the tasks given, and that is when gamification has succeeded. These aspects are aligned with the requirements for promoting play rather than work and acknowledgement for overcoming challenges, implying that gamification will be implemented in the product proposal.

Challenging Play Twister Concept

To better understand how Light Show (Ill. 63) would work in a home setting, the concept was tried out on the primary user, Sille. The concept was set up in her parents' living room, and while Sille tested it out, her parent, Rasmus, observed and gave feedback on the game.

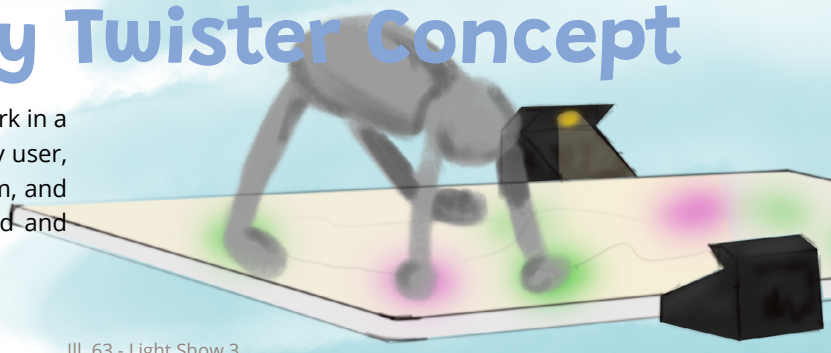

Ill. 63 - Light Show 3

Observations and Feedback: *Light Show*



ORAL AND VISUAL FEEDFORWARD AND FEEDBACK

Ill. 64 - Sille & Tiles

Visual observation, Child: Sille

- This test confirmed what was already tested beforehand: it is hard to maintain balance and maintain positions. Sille (6 years old) tried the product, and it was evident that she could not play properly because of her size.
- Also, the fact that she could not tell left from right confirmed that she would need visual and oral commands. It proves that this could be a problem for children at this age.
- Sille found the game fun when asked, which is not always reliable feedback when working with children.

Oral feedback, Parent: Rasmus

"*You can really she is challenged on her balance, when training the game*"

- Rasmus

"*It is cool, but quickly becomes large to have to stand in relation to the fact that it might not be used that often*"

- Rasmus

Takeaways from the test

Rasmus could see potential in "Play Twister" and how it trained Silles' balance, while she was playing, which he thought was amazing. However, he felt the game was very big, especially when unused. Here, he referred to the big mattress that ensured the dynamic surface. A rubber mattress would still take up a lot of space even if folded away. If it were an air mattress the children would not be able to set it up alone, and it would take a long time. It also became apparent that Rasmus feared the game's longevity and called it a "periodic play" because the play only had one function or one play style, which would result in the children liking it for a period and then losing interest.

INSIGHT

These new insights resulted in the following conclusion: As the Play Twister concept had confirmation from multiple stakeholders the next step was to split the concept into parts to make it more tangible and better understand its working principles and how to optimise and redesign these. Currently, the Play Twister concept consists of three separate aspects that must be investigated further:

- Projection emitting a picture onto the play space
- A dynamic surface within the play space
- An app or hub to monitor the progression

MORE THAN JUST REGULAR TWISTER

As stated by physiotherapist, Gitte, The Play Twister concept already does a variety of great things to stimulate postural control. Still, **the special part about it is its ability to make training feel like play** (App. 25). This aspect will be investigated in the next part of the process, where the implementation of gamification characteristics as seen in the former section will pave the way for the further development of the product proposal.

Games Designed for Training of Postural Control

An idea came to life when considering what kind of games could be designed for postural control. When visiting the kindergarten Blåkildevej, the pedagogues emphasised that the children often played games with their parents at home, which they had learned in kindergarten.

The following games were observed played at the kindergarten:

- **Hide and Seek**
- **Tag**
- **Follow my leader**
- **The floor is Lava (Obstacle course)**
- **Simon Says**

Some of these games were incorporated into new games that could be used to train postural control and work with the working principles. While designing the games the mattress and dynamic surface were looked at and redesigned for the new game concepts to be smaller, which was part of the feedback from the users. This resulted in the following concept called Wobble (Ill. 65)



Ill. 65 - First render of the Wobble concept

THE NEW CONCEPT CONSISTS OF THE FOLLOWING

- A dynamic surface
- A shell
- Lighting to help indicate how to play the games, which will follow what is being presented on a tablet/app

The concept would allow games to be designed or reinterpreted to fit within the Wobble limits.

Test of Games

Four games were developed: Crawling game (based on Twister), Follow Wobble (based on Follow my Leader), and Wobble Tag (based on Tag).

The next step was to test the three developed games and to get an understanding of if the games first of all was fun and second of all if they trained motor skills and postural control as presumed. The games were first tested by the kindergarten children, and then a video of the children playing the games was shown to Gitte, the physiotherapist to ensure, that the games were training motor skills. Gitte's response to what the different games train can be seen in the training segment. Lastly, the games were played by the user, Sille, with her parents present to see how they functioned at home. (App. 29, App. 30, App. 26 and App. 31).

AWARE

All results are primarily based on observations from the children's body language and secondary the oral communications they gave after playing the games. On of the main factors for success of the different iterations of the games is the effectiveness of training motor skills and the children ability to understand how the games is played.

Follow Wobble



Ill. 66 - Follow Wobble

"Follow Wobble" is a game where you have four pads with uneven surfaces to interact with. These can show both the icon of a foot or a hand showing what needs to touch the pad.

In the game, you have to follow a represented figure's movement touching the pads accordingly. This will award you points and challenge your postural control.

TRAINING

Balance Reaction
Balance Control
Core
Joints

PLAY

Follow my leader
Challenges
Difficulty scaling
Progress tracking

Testing: Kindergarten (Play)

Eight pieces of wood have been placed on the floor in two groups of four across of each other to emulate a person doing it on a screen. The demonstrator does a movement and the user follows the movement.

Different set-up:

- Wobble Pad: Stable Surface
- Wobble Pad: Unstable Surface (Foam)





Ill. 67 - Stable surface



Ill. 68 - Dynamic surface

Result of Testing: Kindergarten (Play)



Ill. 69 - Stable surface 2



Ill. 70 - Dynamic surface 2

Positive

- Unstable Surface: T**rains the desired training**
- Finds the **game fun** because of the **challenges** the unstable surface gives
- Reminds them of "Follow my Leader"
- Unstable Surface visually challenged the children

Negative

- Stable Surfaces: Does not **present a big enough challenge to train postural control**
- Visually the children did not seem to find it challenging
- Limited visual communication sometimes made it hard for the children to understand

Testing: User (Context)

The user (Sille) played the game in the living room while her parents observed to give feedback on the game in comparison to the context and play.



Ill. 71 - Testing context

Positive

- It really **trained Sille's balance** and the parents really liked that
- This game **did not need much space**
- The parents liked that Sille used a lot of **energy and concentration** without running around the house

Negative

- Sille sometime had **difficulties with following the movements**
- The product needed **better indication for interaction**: some sort of light or voice indication - especially she should follow something on the screen

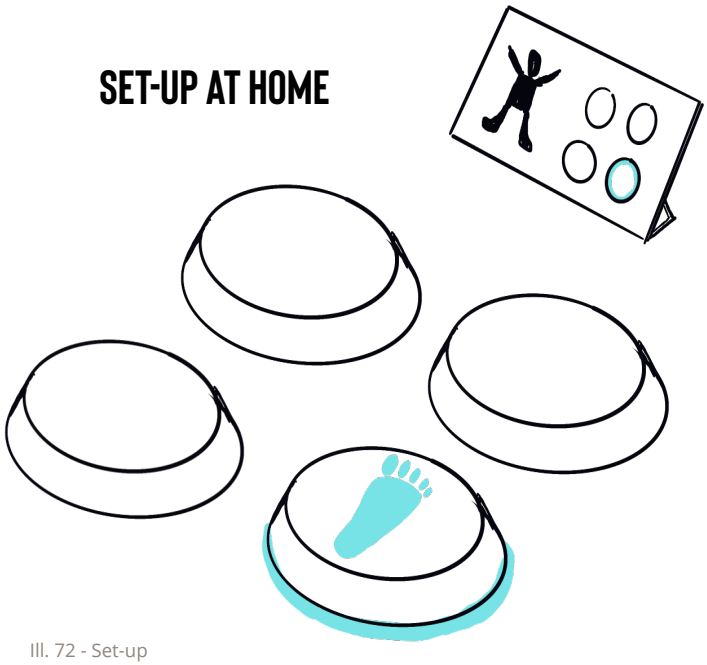

Ill. 72 - Set-up

SUM UP

The dynamic surface worked as intended and stimulated Silles balance. All of the users understood how to play the game and using "follow my leader" worked well as an explanation method. The kindergarten children also became really excited when "follow my leader" was announced as the game, because they found the game fun. They also liked playing on the dynamic surface more fun, than the stable one. Which was not only good for the the game play, but the training of postural control as well.

Wobble Tag

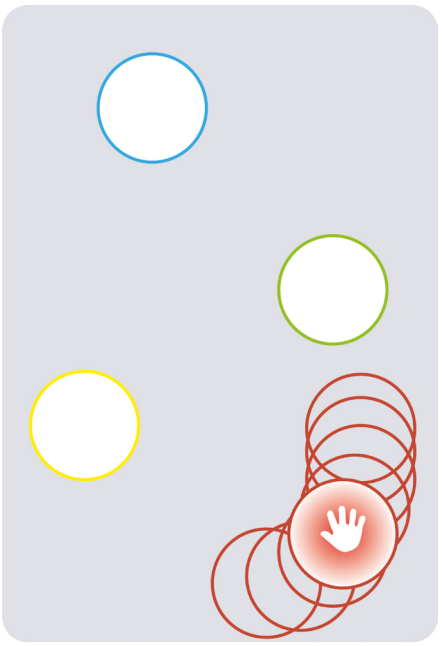

Ill. 72 - Wobble Tag

The purpose of "Wobble Tag" or in other words "Whack a Mole" is to hit as many pads as possible without missing the time window that the light emits from the pads as this would result in a strike. Points are awarded for hitting the pads.

In this regard, it is possible to scale the gamification by for example awarding more points for hitting a colour that is worth more points than another.

The game is played with your hands urging you to bend over and resulting stimulate your postural control.

The game can be played in different sizes and set-ups with different pre-sets that are recommended. Yet you are also urged to set up the pads on your own to create custom levels around obstacles in the room available to you.

TRAINING

- Balance
- Reaction
- Cognitive Thinking
- Pulse activity
- Proprioception

PLAY

- Tag
- Challenges
- Difficulty scaling
- Progress tracking

Testing: Kindergarten

Place four pieces of wood on the floor. Use a flash light to emulate the light coming from the Wobble Pad. Move the light around so the children have to catch it with their hands.

Different set-up:

- Wobble Pad
- Wobble Pad with Background
- Moving Wobble Pad



Ill. 73 - Standard version: Wobble pad

Testing of Wobble Tag is done as mentioned above with no extra elements to increase fun.

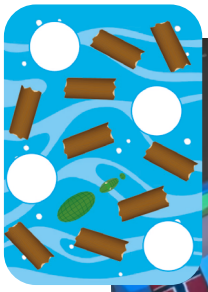

The floor is lava



Ill. 74 - Standard version w. Background

By adding the use of a projector "Wobble Tag" can involve the "Floor is Lava". The children still needs to catch the light, but now they can only move around using the logs and Wobble Pads.



Ill. 75 - Moving wobble pads

The Wobble pads are now moving objects that the children has to keep track of while still catching the light, this has the ability to put more pressure on their reaction ability.

Results: Kindergarten



Standard version: Wobble Pad

This version of the games trains the desired motor skills. By using tag as an example for explaining the game, the children quickly understood what the purpose was. They found the game fun and an element of competitiveness could be added to the game to create competitiveness between the children.

Ill. 76 - Standard version: Wobble pad 2

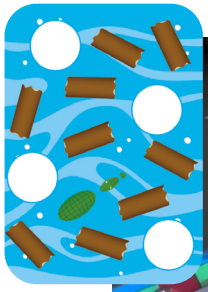

The floor is lava



Wobble Pad W. Background

Using a projector for creating background did increase the game play for some of the children, but it also limited the play area, which limited the pulse activity for the training. The projector further created a problem for design in relation to the flooring and set-up experience, because of different types of floors and ceiling heights.

Ill. 77 - Standard version w. Background 2



Moving Wobble Pads

The moving Wobble Pads did not do anything for the game and actually ended up distracting them to the point there they did not play the game any longer. The children actually cheated by just standing still and waited for the pads to come to them, which limited the activity and proprioception.

Ill. 78 - Moving wobble pads 2

Testing: User (Context)

The user (Sille) played the game in the living room and while her parents observed to give feedback on the game in comparison to the context and play.



Ill. 79 - Set-up in the home

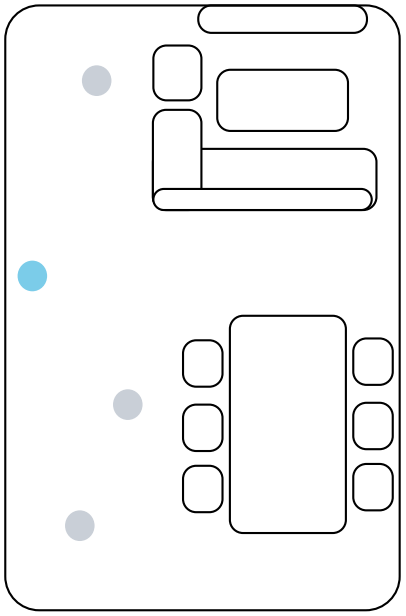

Result of Testing: User (Context)

The user (Sille) played the game in the living room and while her parents observed to give feedback on the game in comparison to the context and play.

Positive

- It is nice to be able to **activate the children indoors at home** - especially in the winter
- Wobble can be **incorporated into other obstacle courses or contexts**
- Nice if it could **function outdoors** as well
- Easy to transport and can be used in other rooms

Negative

- "*We have lots of space in the living room what if you have a smaller living room?*" - Rasmus

Rasmus also did not like the projector because he thought it would limit the game. It would take a long time to set up, and the children would not be able to start the game by themselves if the projector was hanging from the ceiling out of reach.

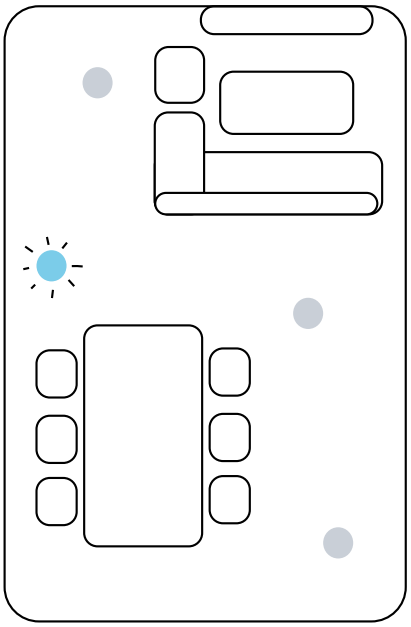

Ill. 80 - Set-up in the home 2

SUM UP

"Follow Wobble" works as interned and was liked by both the children and parents. Ramsus does have a point with them having a larger living area, which is why the Wobble Pads should have some sort of feedback or feed forward to ensure that they can be found around or behind furniture. This could be in the form of a light or sound indicator.

Crawling game



Ill. 81 - Crawling game

The Crawling Game is a physically demanding game inspired by Twister. It is split into 4 different corners and each corner corresponds to a specific limb. This means:

- Upper left = left hand
- Upper right = right hand
- Lower left = left foot
- Lower right = right foot.

Each corner has 4 pads where it is possible to place either your hand or foot.

During the game, a new pad will light up when the former has been pressed resulting in a dynamic game where you have to orient yourself and adjust your position accordingly.

Points are awarded for touching the pads and falling results in game over.

TRAINING

Balance
Joints
Extreme Core
Head down

PLAY

Tag
Progress tracking
Challenges
Difficulty scaling

Testing: Kindergarten

Twelve pieces of paper have been placed out on the floor to simulate the game board. A hand is then used to indicate for the players where they should move their feet or hands from and to. The important thing for this game is, that the children always are down on all four.

Limitations:

- The Wobble Pad should have been placed in all four corners to make areas with unstable surfaces, as indicated with the circles (Ill. 81), but this was too difficult.

Result of Testing: Kindergarten (Play)

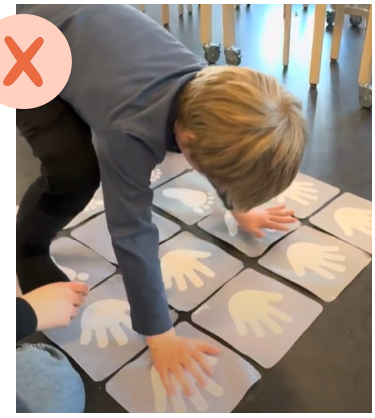

Ill. 82 - Kindergarten

Positive

- The best at training postural control

Negative

- **Very hard**
- **Not that fun**
- Does **not function only with four Wobble Pads** and a screen
- **Needs additional products** to function

Testing: User (Context)

The user (Sille) played the game in the living room and while her parents observed to give feedback on the game in comparison to the context and play.

For this test the fields was limited to eight and a flash light was used to indicate where Sille should move her feet and hands.



Ill. 83 - Set-up crawling game

Positive

- The parents really liked that it was a **training tool** and Sille clearly **used a lot of energy**
- Sille found it very hard

Negative

- **Lack of visual indications** made it hard for the Sille to understand where to move her hand and feet
- The game needs more than just four Wobble Pads to be able to do
- Did **not** find the game **fun**

SUM UP

The children did not find this game fun, it was more like work and hard training for them. Which is the exact opposite of the requirements. The game furthermore need extra products to work, which is not ideal either. Some functions of the game can however become part of “Follow Wobble” as they work on the same premises

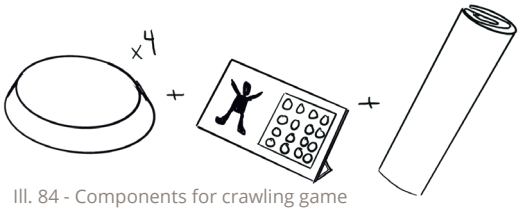

Ill. 84 - Components for crawling game

Choice of Games

Based on previous feedback and knowledge, it was desired that Wobble should be able to perform both "Wobble Tag" and "Follow Wobble" to create variety for the children's play and training of motor skills.

The two games activate different active parts and exercises to train motor skills and postural control. By providing both games, Wobble becomes a more diverse product, allowing different play experiences. Gitte, the physical therapist (App. 26), was also shown the games and the Wobble concept. She confirmed that the product was much more than just a balance product.

"*The product you have here.. it can do many more things, and will not only be balance challenging. We have some pulse, space-direction sensation, cognitive, memory, reaction, core, balance... you have many, many more elements... it's not a balance product, but an all-round motor and physical training product.*"

- Gitte: physical therapist (App. 26)



Ill. 85 - Chosen games

SUM UP

The feedback from Gitte confirmed that Wobble's games did train postural control and motor skills. Furthermore, while not being the original intention, the product was shown to have the potential of doing more than just training motor skills. This could be a point that could be explored for future development or expansion into other markets.

Problem Slicing

After choosing the Wobble concept, the next step was to initiate problem-slicing to separate the components and determine the main elements for further detailing and development.

To successfully design the product, the following three elements were considered for development:

- A Wobble App
- A Wobble Pad
- A Wobble Dock/charger

For Milestone 4 the following design was quickly developed to convey the current concept of Wobble and what was required for the Wobbe Pad to function.

- Light to indicate what Wobble Pad to interact with.
- Light indication to determine the use of either foot or hand.
- A charging station that can be used as a home and for transportation of Wobble Pads.
- An app that can convey the intended use for children.

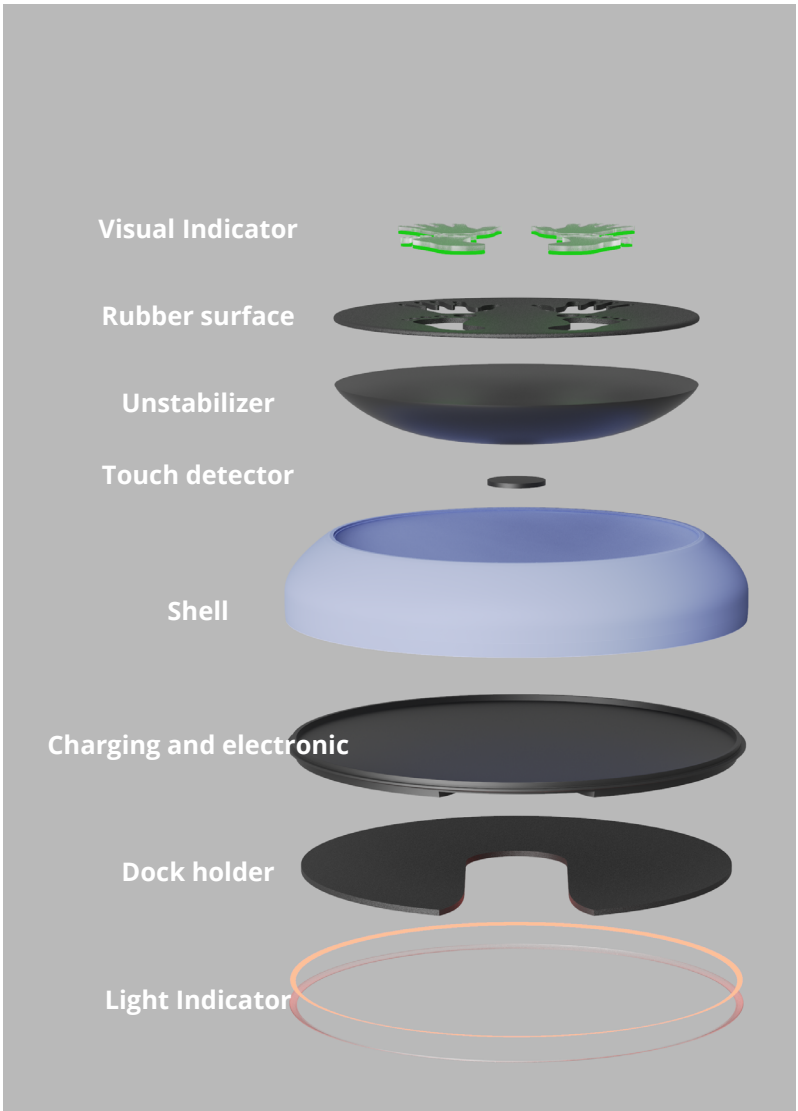

Ill. 85 - Exploeded view phase 3



Ill. 85 - Concept idea phase 3

Requirements

Wobble App

No.	Need	Imp.	Units	Reference
1	Activate cognitive thinking	5	-	How to Improve Motor Skills, p. 11
2	Rotate a minimum of 90 degrees in the: Lateral axis (Cartwheel) Anterior axis (Forward Roll) Posterior axis (Spinning)	5	Degrees	Concept Feedback, p. 35
3	Postural control stimulation minimum 15 minutes a day (5 min. x3)	4	Min.	Postural Control, p. 24
4	Provide solo and multiplayer play	3	-	Observations from Blåkildevej Kindergarten, p. 22
5	Compatibility with difficulty scaling	4	-	Observations from Blåkildevej Kindergarten, p. 22
6	Promote play rather than work	5	-	Theory of Play, p. 13
7	Include digital media	5	-	Observations of Play, p. 14
8	Provide acknowledgement for overcoming challenges	4	-	The Ideal Play Situation for a Rehabilitation Game, p. 23

Wobble Pad

No.	Need	Imp.	Units	Reference
1	Include an active physical product	5	-	Use of Digital Media for Training Gross Motor Skills, p. 17
2	Contain a dynamic surface	3	-	Testing out Equipment, p. 28
3	Active digital media consumption	4	-	Use of Digital Media for Training Gross Motor Skills, p. 17
4	Oral and visual feedforward and feedback	3	-	Challenging the Play Twister Concept, p. 38
5	Avoid damage to furniture and interior decorations	3	-	The Context, p. 25
6	Can freely be moved to different locations during play	3	-	The Playground, p. 23
7	Set up and clean up time: 5-10 minutes	3	Min.	The Context, p. 25
8	Main setup on the floor	3	-	Concept Feedback, p. 35

Wobble Dock

No.	Need	Imp.	Units	Reference
1	Fit within the living room	4	-	The Context, p. 25
2	Reduction of size when not in use	2	-	The Context, p. 25

Ill. 85 - Phase 4



Phase 04
Wobble App

The main objective for this phase is to develop the app's interface and function. The design of the interface has to appeal to the target group, which is a young audience of 5-7 years old. The app's function should allow control of the Wobble Pad while focusing on developing motor skills and creating an appealing motivation factor for the children. With this in mind, the interface was developed following an approach to testing and prototyping.

As the Wobble App, Wobble Pad, and Wobble Dock all have to work together in a system, it was decided to work with them all in parallel. Still, for simplicity reasons, they would be separated into three distinct phases. Phase 4 revolves around the Wobble App, Phase 5 around the Wobble Pad, and Phase 6 around the Wobble Dock. The phases will be summarised in Phase 7, combining them all.

The Interface

The Wobble App is the first point of interaction when using Wobble. The Wobble App needs a lot of functions, which both help the game and play experience but also help the children keep their motivation up and allow the physicians to track the progress in the improvement of their motor skills. This has resulted in the following problem slicing of the app:

Motivating
- Progress tracking

Notifications
- Remember to train
- Software update

Control centre
- Connecting to the Wobble Pad
- Turn it on and off
- Choosing game



Ill. 86 - The rainbow functions as positive feedback and is the reward

INTERFACE FOR CHILDREN

Different rules must be applied when designing children's interfaces to ensure that they continue engaging with Wobble.

According to Maria Kasymova, UX Designer, there are five design principles which should be used as a design guide when designing UX for children:

- Design for your target age group
- Choose the color palette and fonts carefully
- A friendly digital helper
- Constant feedback and reward.
- Make it as intuitive as possible

(Kernaghan, 2022)

Children's Games for Tablets

A case study was conducted by researching existing children's tablet games to further understand how children use an app's interface and how the interface should be designed.

When designing the game's interface, existing educational games for children were researched to understand how children navigate these different interface sites and how design language and icons can create a better user experience.

The following games were used for the case study because they all offer different game modes and options when downloading one app. The games are all furthermore for the age group +4. See App. 32 for all the three apps.



Ill. 87 - LEGO Duplo



Ill. 88 - LEGO Duplo: Home page

As seen for the games' home screen (Ill. 88), they generally follow the same design language across all three platforms. A big wheel with icons full of different game modes quickly lets the young user understand the various play options. On all three platforms, it works by using a scroll interaction, which is the primary interaction focus for the children. Other smaller icons are used or designed for use by the parents, such as purchase options, settings, and sound.

INSIGHTS

When comparing the three apps, some traits were present across all three of the design

- Wheels when browsing game options
- Limited buttons to interact with
- The use of IPs for communication
- Bright Colors
- Big Icons

Grown-up Only Section

The grown-up (Ill. 89) section is a common feature across all platforms. It controls sound, settings, and purchases. The game asks a question to allow the user to access these futures, and the correct answer allows access.

LEGO DUPLO WORLD: Time and Learning Report

This feature is found under the "grown-up section" and gives the parents an overview of how much time their children use on the different games and what goals they are working towards learning when playing them.

This feature is a great example of how it would be possible to track how much time the children spend playing. The DUPLO game report shows the total time spent playing the different games. Wobble should give a weekly overview of time spent. However, Wobble's tracking should be for the children to keep up their motivation and not only be accessible in the grown-up section.

Motivation

Across all three games, there is a limited reward for completing a game. The children are visually rewarded with a star, rainbow, or confetti and a sound indicating that the job is well done. No scoring or leaderboard shows how well the user performed on the specific gameplay; it is just that the user completed the assignment.

In the DUPLO game, progress is used in the individual mini-games. The game becomes more complex, which allows the user to experience satisfaction through progress.

INCLUDE GROWN-UP SECTION

SUM UP

The main idea was to motivate the children using point-scoring and leaderboards, but when looking at existing games for children in our age group, none of the games used point-scoring as a motivating factor. This leads to the conclusion that this method of motivation is not ideal. This could also be confirmed when visiting the kindergarten, where goal scoring and competition had a tendency to discourage children when they did not perform well (see page 23).

This leads to research on interactive play and how to keep children motivated through point-scoring, high scores, and leaderboards

LEGO DUPLO WORLD

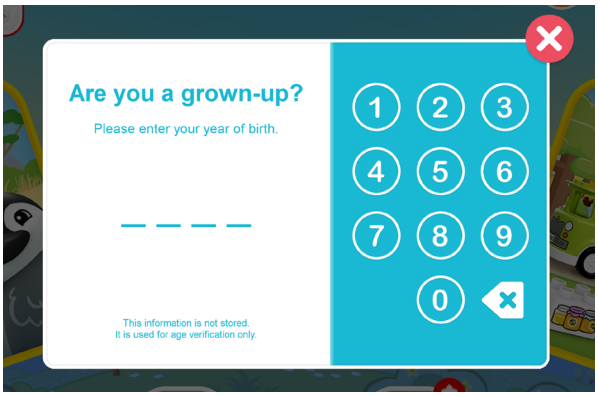

Ill. 89 - LEGO Duplo Grown-up



Ill. 90 - LEGO Duplo Information

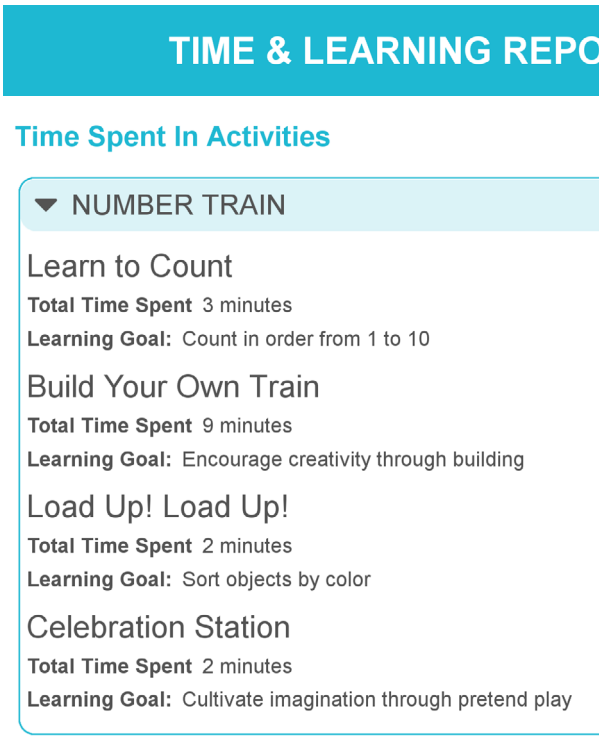

Ill. 91 - LEGO Duplo Time and learning report

Interactive Play Design

Many children today interact with each other through interactive play. It is a great source of development for children and can teach them essential skills to help them grow. Interactive play is a play between two or more people. It can be cooperative or competitive and generally involves physical games and activities. It is excellent for teaching and helping children build relationships and teamwork.

Games that include interactive play are:

- Interactive boards games
- Sports: Football, handball, volleyball and other team sports
- Tag

Interactive play is great for developing motor skills. Most interactive play focuses on being active, where children can learn to control their movements while playing with others, which helps them develop their coordination and muscle control. Benefits of interactive play include:

- Physical play
- Cognitive thinking
- Children's health
- Social skills

"Interactive activities aim to provide opportunities for children to apply the knowledge they have learned in a fun and stimulating way. This helps reinforce the learning process and allows children to develop new skills. Additionally, interactive activities can help children engage and create a more positive learning environment."

- (Park N Play Design, 2023)



Ill. 92 - Outdoor exergame



Ill. 93 - Wobble

In the Need of a Friend

When developing the games, one of the main focuses was to design games around existing interactive games and play that children already could associate with from their time on the playgrounds, like tag and follow my leader. This will captivate and keep the children more engaged.

Interactive play also helps children's motivation. Children have a short attention span and tend to lose interest quickly in anything that they don't find stimulating (Miniland, 2024). Applying the concept of interactive play to a solo-player game would allow the children to learn and train in a fun and interactive way.

Wobble in itself can not be considered interactive play because of the concept of solo play and the lack of involvement of more people. This is where "the friendly digital helper" comes into play. By having a character who guides, helps and plays along with the child, the emulation of interactive play would come into play.

SUM UP

The development of a friendly digital helper should be featured in the game's design to keep the children motivated during physiotherapy. The friendly helper should also provide a source of motivation for the children through visual and oral acknowledgement when overcoming a challenge. The next step in development would be to design the interface and a friendly digital helper.

~~INCLUDE DIGITAL MEDIA~~

PROVIDE A MOTIVATIONAL DIGITAL HELPER

Interaction with the Tablet

While on a user visit (App. 30), Christina and Rasmus demonstrated a game that allowed for active consumption, which Sille liked to participate in and had a lot of fun with. The "game" (which is based on characters from a TV show) is called "DanseMix" and is available on DR: Ramasjang. This "game" is a simplified version of "Just Dance", where the user has to follow a choreography demonstrated on the screen. The exciting thing here is that the "game" is, in fact, not a game. There is no interaction with the tablet because it is just a 3-4 minute video, where IPs are teaching the children how to dance. There is no indication of how well the children perform or if they follow the steps perfectly. It is JustDance, just without the gamification (DR, 2024).

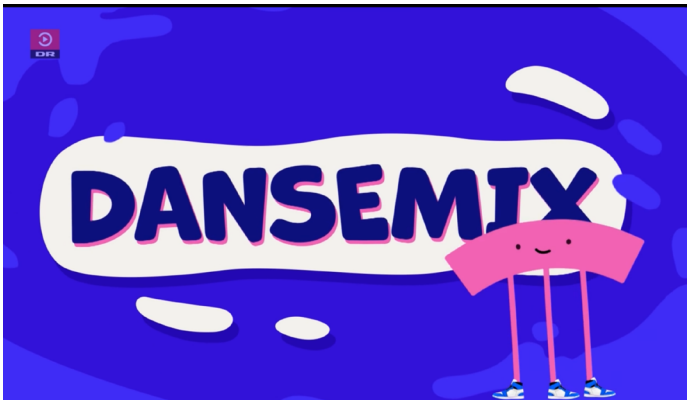

Ill. 94 - Danse Mix

Sille, however, finds the show very fun and can keep playing for hours. She does not need any motivation to play the game, such as score, progress, or rewards. Sille can sometimes play DanseMix for hours one day and the next day. When the game is suggested, she does not want to play it at all, and sometimes, she only plays it for 10 minutes. This is a general tendency seen across all children: the game they want to participate in varies depending on the day.

SUM UP

The main takeaway from the observation of DanseMix is that Sille understands and can follow, or at least try to follow, what is being demonstrated on the screen. The reference to existing movements, like a dance move that mimics the movement of using a skateboard, which she can associate with everyday experiences, gives an overall better understanding of the moves. This further highlights the importance of associating Wobble's games with existing games that children know and using an IP to provide the needed guidance to understand the games.

GAME EXPLANATION THROUGH KNOWN THERMOLOGY TO CHILDREN

Demonstration: Kickflipper

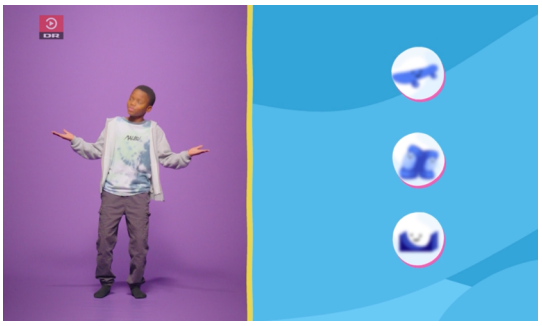

Overview of the three moves the children need to learn.



First, demonstrate the skateboard move. The move always has a connection to the icon symbolising the move.

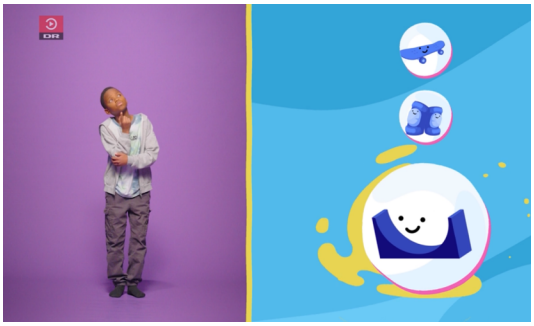

Here, the next move, which is demonstrated, is highlighted.

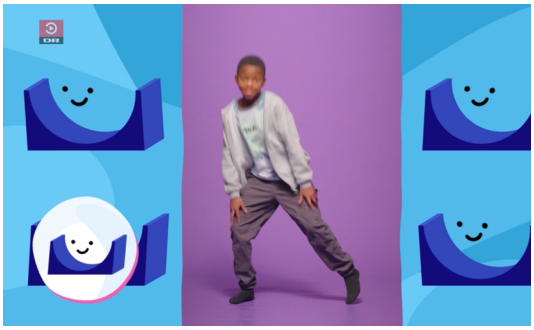

The ramp move is demonstrated.

Ill. 95 - Dance Mix: Kickflipper

Critical Aspects and Main Interactions

Considering the knowledge gained from case studies of other games for the age group, an interface for Wobble must be developed. When designing the interface, it is important to consider the most critical aspects for the game to function and the main interactions that the user will have to work with.

Critical aspects for game functions

- Game set-up
  - Wobble tag
  - Follow Wobble
- Connecting to Wobble Pad
- Progress tracking
- Communication between the app and pad

Main interactions

- Guide through the program
- Friendly Digital Helper
- Game set-up

User Flow

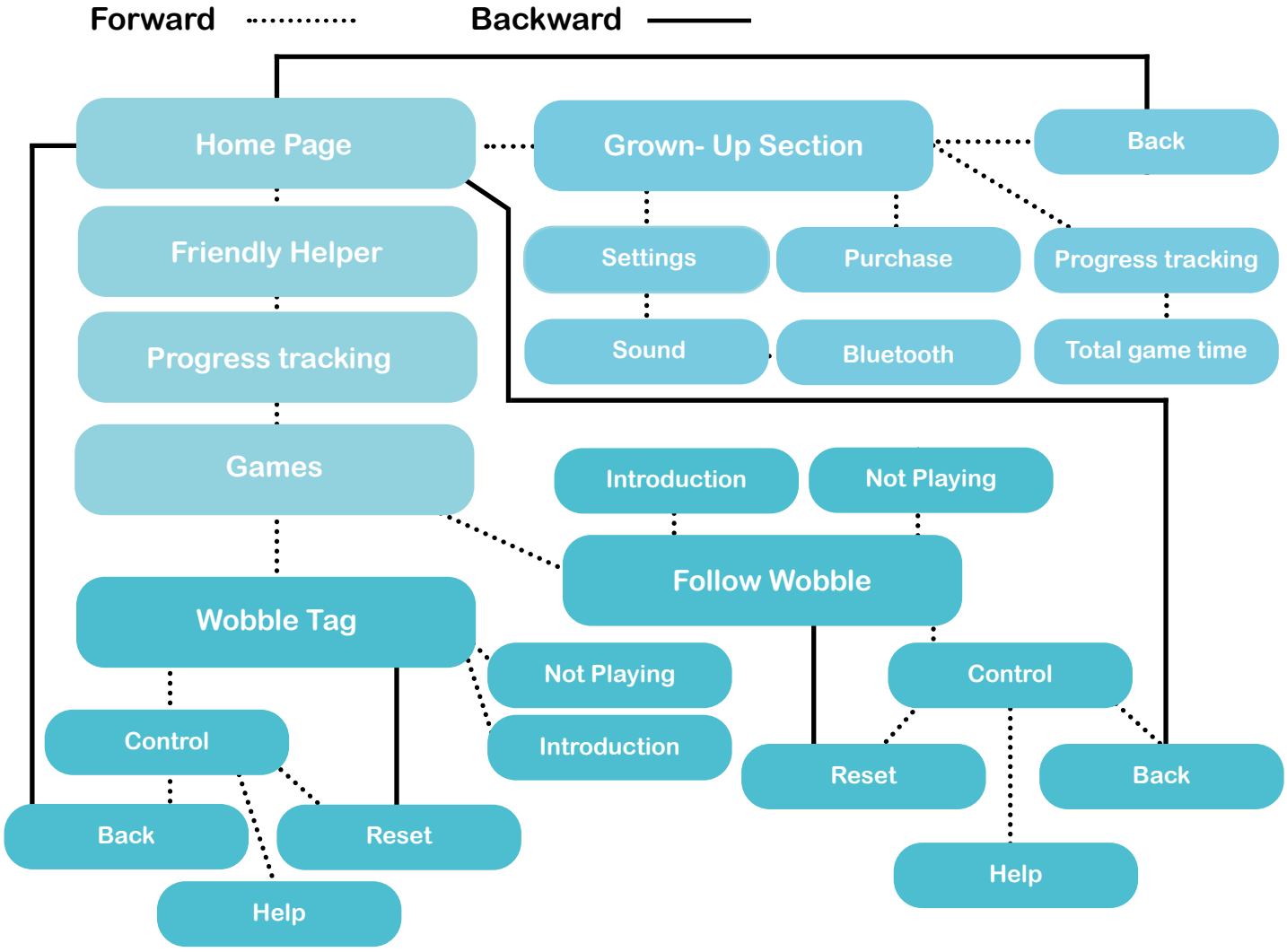

Ill. 96 - User flow

SUM UP

With these critical aspects in place, the interface's development would begin. The first step was to get a general idea of what functions the interface should have. This was done by creating a user flow that allowed the initial user experience concepts to be developed. The user flow was designed to investigate and document the user actions required for a user to complete a task.

Parents vs. Children

When designing the app's interface, it was essential to consider its two different users and what aspects they should interact with. This concept is also present in the apps used for case studies and is known as the "Grown-up section". This part of the app is only for the parents to interact with and allows them to control the setup on the game, which can either control settings and behaviour of the children like a bedtime function and sound or the other primary function for the "Grown-up section" is the ability to make purchases on the app.

This section tends to have more wording and less visual communication, as the parents are expected to know how to read. This section of the app tends to have many more interaction functions simultaneously, which can be overwhelming for children using apps see App. 33 for further understanding the different purposes of the sections of the interface.

Feedback from UX designer

The initial idea was presented to a UX designer, Jonas Blendstrup Rasmussen (Ill. 97), to ensure that all aspects were considered when designing the interface. He provided essential feedback on what to consider when designing an interface for children and what visual queues to use.

1. Use oral communication - children do not know how to read
2. Wobble to be an essential part of the homepage
3. In this case, the tablet is an assistant to the Wobble pad, so the user must have hands-free interactions during games.

The insights resulted in the following customer journey for the interface, which is for interaction without gameplay (Ill. 98).



Ill. 97 - Jonas

Jonas Blendstrup Rasmussen
UX Designer, Marselisborg IT

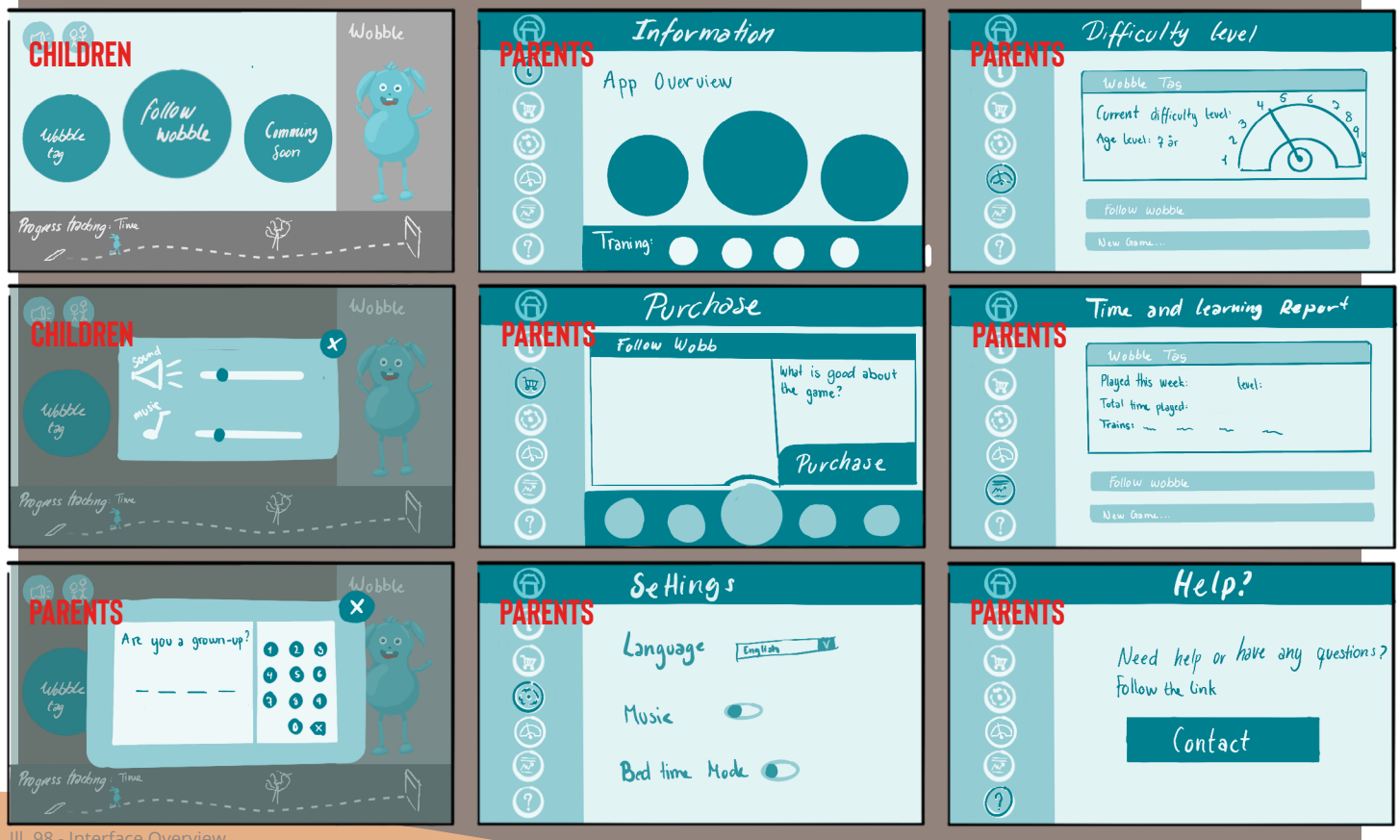

Ill. 98 - Interface Overview

Wobble Tag and Follow Wobble

When trying to understand the minimum criteria for a correct setup for the different games, it is important to consider their different objectives.

Wobble Tag

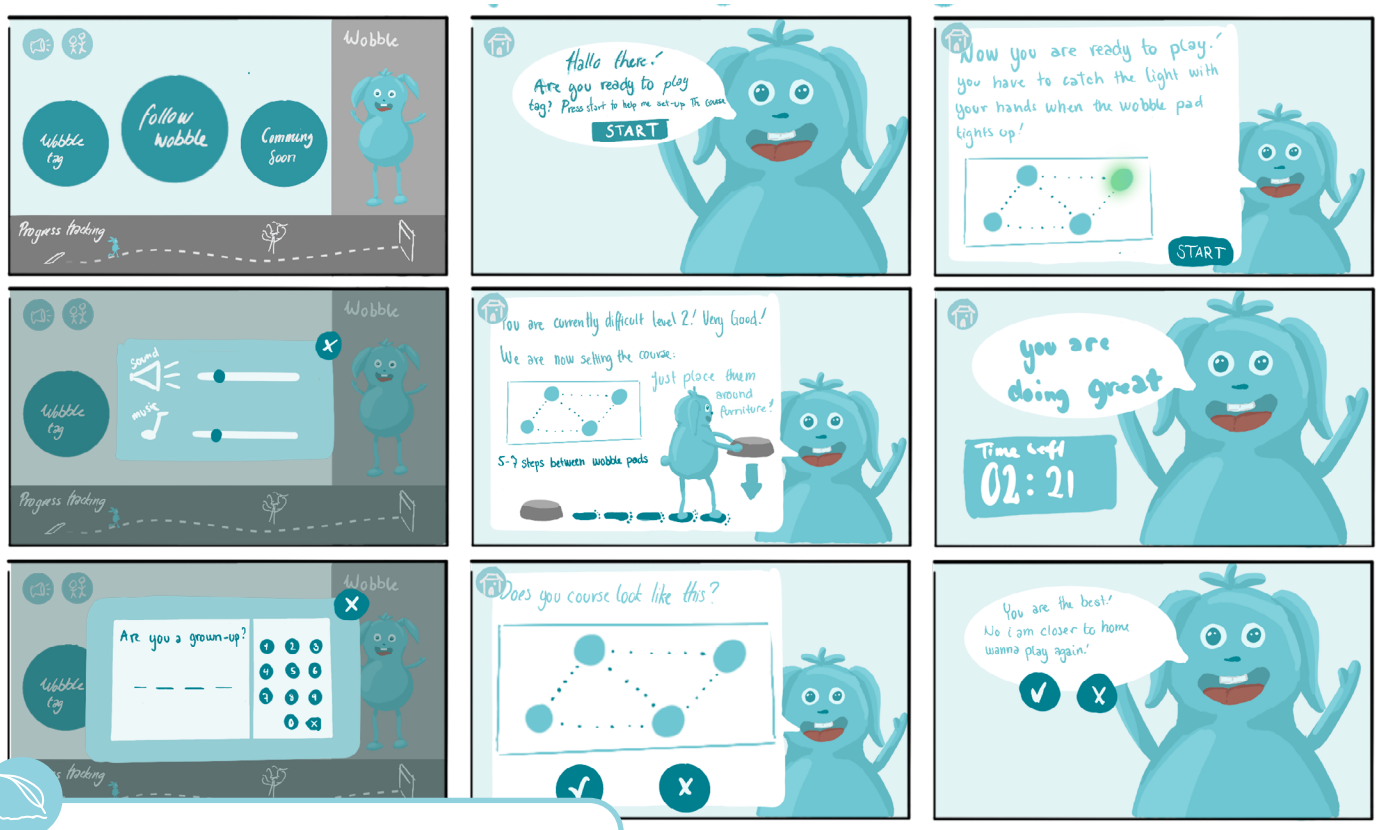

Ill. 99 - Interface Wobble Tag

Minimum criteria for set up of Wobble Tag is around 2 meters between each pad as observed in App. 29 to ensure pulse activity.

The main objective for Wobble tag is to get the participant to move or run around to touch the Wobble Pad that is lighting up. What is not supposed to happen is that the participant can touch all the Wobble pads by being stationary in the same spot. For this not to happen, there must be around two meters between the Wobble Pads as seen in App. 29.

Provided that the children can place the Wobble Pads correctly on the ground, increasing the difficulty level should not be a problem. The pads can either stay the same distance apart, decreasing the time between light-ups, or the distance between the Wobble Pads can increase to create a further running distance.

Since children supposedly do not know what two meters are, the distance must be measured using another method. The decision here was to use steps to guide the distance between pads. Most children at that age can count to ten, which is more than enough steps needed to measure around two meters. It is assumed that 5-6 children's steps equals around two meters, which is then used for further testing of the setup.

Follow Wobble

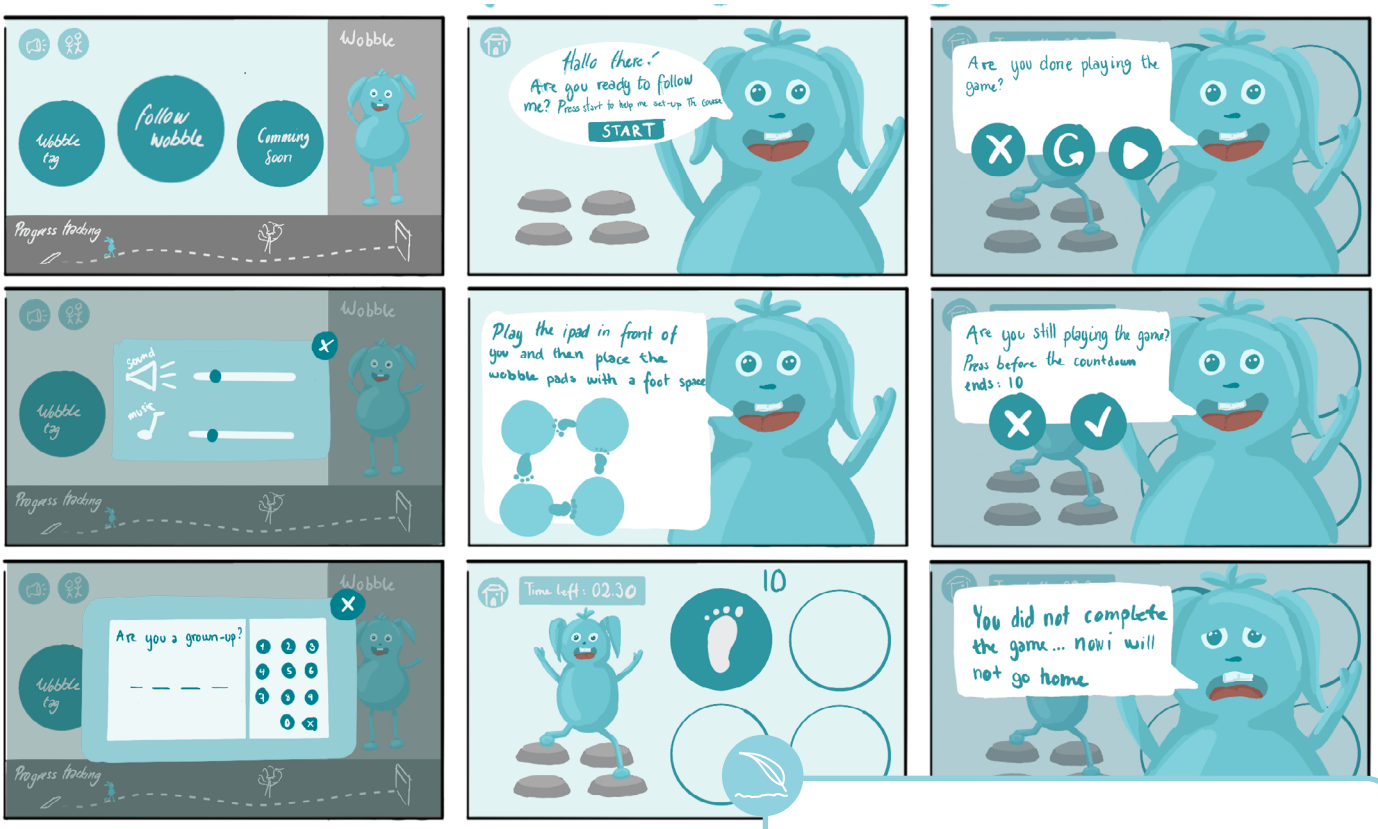

Ill. 100 - Follow Wobble

For the set-up of the game Follow Wobble, the criteria for minimum play is that the children understand how to follow the moves of a fictional character. This concept was confirmed when the user Sille demonstrated her skills at DanseMix, where she was able to follow the moves demonstrated by the characters on the screen.

NEXT STEP

The next objective is to test whether the children understand how to set up the games correctly using the information provided by the fictional character Wobble. For this, the oldest children aged 5 to 6 at the kindergarten Blåkildevej were used as test persons.

Testing of Set-Up

To ensure that the children understood the interaction with the app, a test was made to verify how they navigated through the app. This test tests the interaction with the set-up to see if the children can set up the games correctly. The user flow through the app was further tested to see if they understood how to navigate through the app.

This interface test is being done through a prototype made in PowerPoint (App. 34), using the method "Wizard of Oz" (Ramaswamy & Rosala, 2024) to emulate the "friendly digital helper," which is the designed character Wobble. In this case, Wobble is portrayed by Line, who is acting in a video like the character Wobble would be doing to guide the user through the game set-up.

The Wobble Pads were made of cardboard and painted to represent the light they would light up so the user could identify which wobble pad to place where. To understand how the test was rated see App. 35.



Ill. 101 - Testing the Set up

Initial thought on the testing process

The testing started relatively controlled. The children were listening well and somewhat concentrating. The testing was performed on all three children at the same time. This might have been the first fault or inaccuracy in the testing compared to how the setup and one-player game are supposed to function.

It is also generally difficult to get the correct feedback from children when they provide it through oral feedback because they just say what they think you want to hear.

Keeping this in mind, observations of how the children perform become the leading indicator for whether the user flow and interface work for them and whether the current approach to the design, user flow, and communication is the correct approach moving forward.



Ill. 102 - Samkri (5), Anna (5), and Robert (6)

Observation of the user-flow

As mentioned above, the interface prototype was made in PowerPoint, and the slide show was presented on the laptop for the children. The PowerPoint presentation was done on the computer instead of a tablet, so it was possible to control the interaction, such as moving the children to the correct slide while navigating through the interface.

An example of what a slide could look like, see all the slides (App. 34):

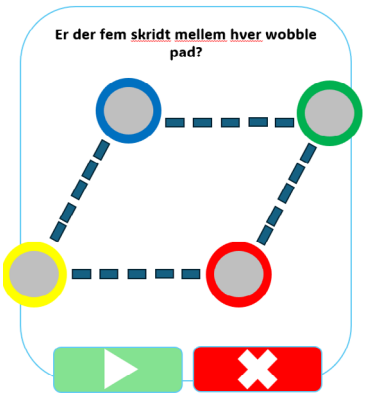

Ill. 103 - Slide from Power Point



There is a difference between the user understanding how to navigate through the user flow and how to navigate through the game set-up interaction.



Ill. 104 - Testing the Interface

SUM UP

The test provides a better understanding of how to design a game interface for children so that they can navigate through the game experience independently. It also became apparent that the friendly digital helper should be used more to help the user understand the game concept.

It is still a problem for the children to understand how to set up the course correctly to play Wobble Tag, where they had to space the Wobble Pads five steps apart. However, after being taught once how to set up the course correctly, they did it right the second time without needing any help. So, for the first time playing the game, it is logical to assume that the parents must help the children when they try out a new game.

Sum Up

Through the development and testing of the Wobble App, it became clear that the interface should use more visual and oral communication than the current version of the app to better communicate with the children. The current interface design can be handed over to a company that is able to develop the app. It became apparent that maintenance of the app, servers, and so on is needed when providing SaaS (Software as a Service). The ideal would be to start using a provider like StoryToys (StoryToys, 2024) to handle all app development, service, and updates. So, this aspect of the product is outsourced to a supplier or business partner who better understands how to run and maintain an app.

There was no luck obtaining the cost of an app, so the number used in the business case is a guess based on an estimate from Jonas, the UX designer.

Wobble App Requirements

No.	Need	Imp.	Units	Reference
1	Activate cognitive thinking	5	-	How to Improve Motor Skills, p. 11
2	Rotate a minimum of 90 degrees in the: Lateral axis (Cartwheel) Anterior axis (Forward Roll) Posterior axis (Spinning)	5	Degrees	Concept Feedback, p. 35
3	Postural control stimulation minimum 15 minutes a day (5 min. x3)	4	Min.	Postural Control, p. 24
4	Provide solo and multiplayer play	5	-	Observations from Blåkildevej Kindergarten, p. 22
5	Compatibility with difficulty scaling	4	-	Observations from Blåkildevej Kindergarten, p. 22
6	Promote play rather than work	5	-	Theory of Play, p. 13
7	Provide a motivational digital helper	4	-	Interactive Play Design, p. 52
8	Provide acknowledgement for overcoming challenges	4	-	The Ideal Play Situation for a Rehabilitation Game, p. 23
9	Include grown-up section	4	-	Grown-up Only Section, p. 51
10	Game explanation through known thermology to children	5	-	Interaction with the Tablet, p. 53

Ill. 105 - Phase 5



Phase 05
Development of Wobble Pad

The fifth phase of the project revolves around the Wobble Pad, which is to be the physical product integrated into the game. This includes a breakdown of its functionality, form, construction, and production methods. The phase concludes with a final product proposal for the Wobble Pad.

Functionality

The first part of developing the Wobble Pad includes developing its functionality. This includes developing the dynamic surface and how to interact with it during a game. This leads to considerations in feedforward and feedback, as well as how game input will be registered.

Dynamic Surface Testing

One of the most critical parts of the Wobble Pad is its dynamic surface. Therefore, it was essential to find a fitting solution that would sufficiently stimulate postural control while still being able to register input for the game through vertical force. While postural control stimulation is an essential aspect of the product, overstimulation could result in the game becoming too hard. Therefore, it was important that the postural control stimulation could be regulated so it does not take all the focus away from the game. In this regard, three possible solutions were tested to select whether a mechanical or a static solution would fit the product proposal best (App. 36). These solutions included a balance board (Ill. 106), an inflatable balance cushion (Ill. 107), and an EVA foam balance pad (Ill. 108), where the former two were tested in a mock-up to represent the outer shell of the Wobble Pad (Ill. 109).

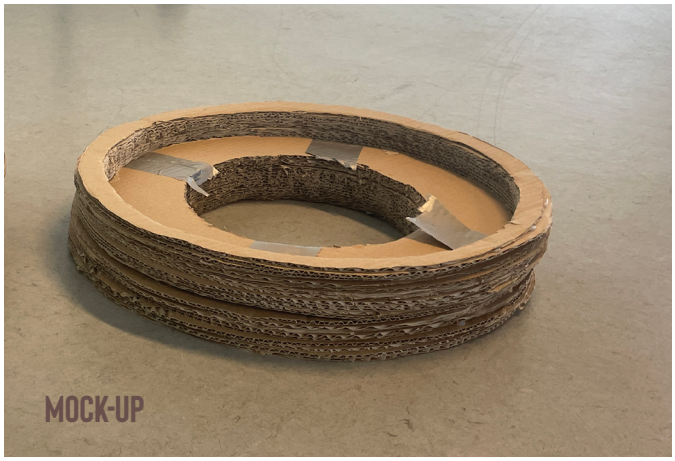

Ill. 109 - Mock-up


Ill. 107 - Inflatable


Ill. 108 - EVA Foam


Ill. 106 - Balance board

Test results

The test showed that the simplicity of the static solutions, like the EVA foam balance pad and the inflatable balance cushion, was preferable as they could challenge postural control most consistently. Furthermore, the static solutions could transfer the vertical forces evenly across the bottom, generating more stability. At the same time, it has the bonus of feeling like a forest floor, known for its stimulating effect on the sense of touch (App. 5). On the other hand, The wooden balance board had some qualities like being scalable in difficulty with adjustments of the tipping angle. However, it was noticed during testing that the user regularly rested the balance board on the tipping angle limits in the mock-up. This would result in concern about the scalability features of this solution, making it too easy.

Safety

Another aspect that was considered is that of safety (App. 37). With the wooden balance board tipping from side to side in a circular enclosure, small air gaps will appear between the outer shell and the dynamic surface. This would be a safety hazard where the moving parts could trap body parts, causing injury. This violates the European Toy Directive (EUR-Lex, 2009), making implementing a mechanical solution as such an overcomplication to the construction, increasing the parts quantity, risk of failure, and overall price.

CHOICE OF DYNAMIC SURFACE

Ultimately, the solution chosen for the dynamic surface is the EVA foam balance pad, mainly due to its simplicity and minimal impact on concentration when playing the game. This is opposed to the inflatable balance cushion, which would require more interactions to ensure the correct pressure and that it does not become too hard or too soft. The choice of the EVA foam solution does, however, raise new questions like: What thickness should it be? How hard/ dense should it be? What foam material would be most suitable for the use case? And how will the vertical forces be converted into input for the game? This will be researched further in the following sections.

THE WOBBLE PAD WILL FEATURE A FOAM DYNAMIC SURFACE

Size Testing of Dynamic Surface

Another aspect of the Dynamic surface has been finding a diameter and height suitable for children aged 5-7 years. This concluded in a test where three different diameters and heights were represented: Ø = 23 cm, Ø = 25 cm, and Ø = 27 cm (Ill. 110), as well as H = 5 cm, H= 7 cm, and H= 10 cm (App. 38). The diameters were determined by utilising the average shoe size for a 7-year-old, which is set to be size 31 (EU) (Vessi, 2024), approximating a foot length of 19,3 cm, while the heights were based on the EVA foam Pad and the wooden balance board (Ill. 111).



Ill. 110 - Sizes

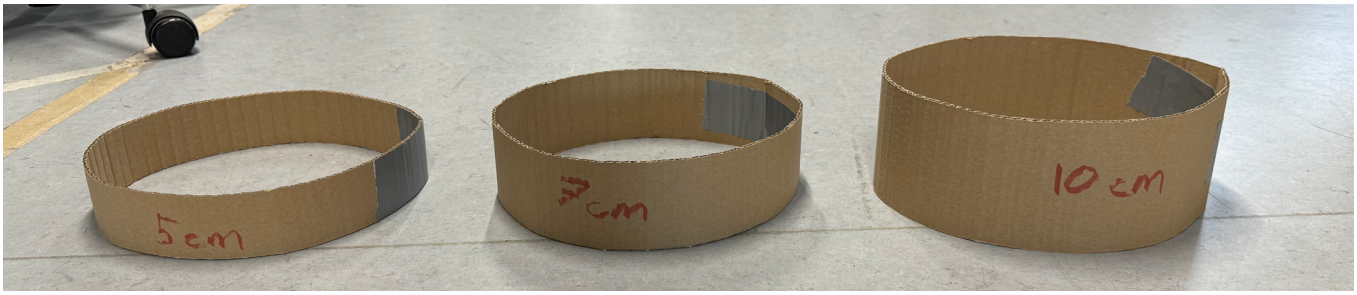

Ill. 111 - Heights

TEST RESULTS

Through testing, it was observed that the 25 cm diameter fit the children's feet perfectly, while the other sizes were either too big or too small. Based on this test, it was also determined that the overall height of the dynamic surface should not be elevated higher than 7 cm as this was proportionally best-looking and would also minimise the risk of falling over it during active play.

MAXIMUM HEIGHT OF, H = 7 CM

MINIMUM DIAMETER OF DYNAMIC SURFACE, Ø = 25 CM

Weight

Another aspect is that a product for children must not become too heavy to carry around; it has therefore been decided to base the maximum weight of the Wobble Pad off of a toy where it has already been observed at Blåkildevej Kindergarten that a child can carry around without problems. This toy is the Floor Surfer from Gonge (Ill. 112), weighing approximately 3 kilograms (PriceRunner, 2024). This weight is also sufficient for adding quality to the product, as an appropriately weighted product can feel more exclusive and durable than its lighter counterparts.



Ill. 112 - Floor Surfer

MAXIMUM WEIGHT OF 3 KG

Interaction testing

Separating Hand Interactions from Foot Interactions

One requirement that dictates how the games are played is the separation of a hand interaction from a foot interaction. To accommodate this requirement, research was conducted into what made a hand interaction a hand interaction that could not be imitated by a foot (App. 39). In the study, three gestures surfaced:



Ill. 113 - Grabbing

GRABBING



Ill. 114 - Pinching

PINCHING



Ill. 115 - Pointing

POINTING

Specifically, grabbing and pinching can be used to do things like pulling and twisting, while pointing can be used to reach narrow spaces. The idea of these gestures initiated an ideation that would utilise them for hand interactions on the Wobble Pad.

The grab handle	Description

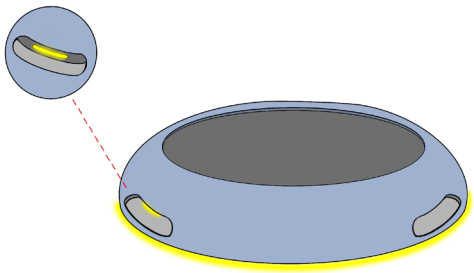

Ill. 116 - Grabbing test

The grab handle would use the gesture of grabbing to reach within an indentation where a button would be placed in the top part, making it harder to reach with a foot.

The rotational handle	Description

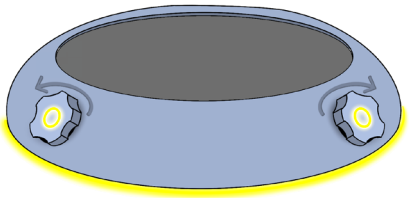

Ill. 117 - Pinching test

The rotational handle is an evolution of the grab handle, where the grabbing gesture is used to twist and rotate the switch.

The conical button	Description

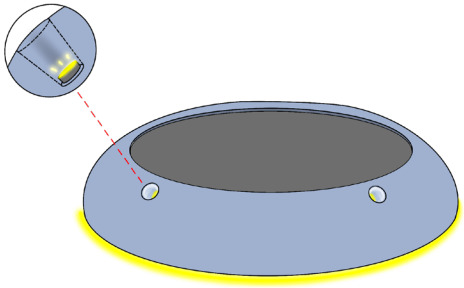

Ill. 118 - Pointing test

The conical button would use the pointing gesture to reach a narrow space that only a finger would be able to.

SUM-UP

After evaluating these, it was quickly decided that the conical button or the pointing gesture would not be considered in the future due to recurring safety concerns. The reasoning is the nature of the games being active play where they might become too wild, increasing the risk of yet again trapping body parts and, in this case, a finger in the narrow space reaching for the button.

Lights and Sound

From Phase 4, it has been concluded that the Wobble Pad would need ways to indicate feedforward and feedback. Following the requirements set for the product, it should be a variant of visual and oral feedback. This has presented a set of solutions based on lights and sound. This also means that the Wobble Pad must implement LEDs and a speaker for presenting feedforward and feedback.

Chosen LEDs and speaker components



Ill. 119 - LED Light

The LEDs selected for the Wobble Pad are composed of an RGB light strip with individually programmable diodes that can display several colours (Ill. 119). This will make it possible to firstly, cut them to size and secondly colour-coordinate the Wobble Pads and distinguish between them during setup and the games.

THE WOBBLE PAD WILL FEATURE AN RGB LED LIGHT STRIP



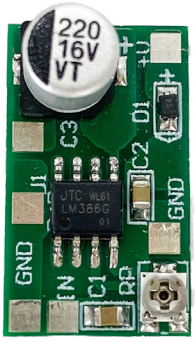

Ill. 120 - 121 - Speaker and Amplifier

The speaker chosen for the Wobble Pad is a 30 mm, 8 Ohm, 1 W mini speaker (Ill. 120). This speaker is only responsible for generating the sounds and voice lines for feedback and feedforward, which is why the performance of this particular part is not of priority. An audio amplifier will be needed to power the speaker. For this case, a mini audio amplifier capable of running between 0,25 W and 25 W has been selected for the task (Ill. 121).

THE WOBBLE PAD WILL FEATURE A MINI AUDIO AMPLIFIER

THE WOBBLE PAD WILL FEATURE A 30 MM, 8 OHM, 1W MINI SPEAKER

Testing Wobble Pad Interactions with Children

To validate whether children would understand the feedforward from the lights and speaker and the separation of foot and hand interactions, mock-ups were made for testing. These include the Wobble Pad with the grab handle (Ill. 124) and the rotational handle (Ill. 122). The testing would be carried out at Blåkildevej Kindergarten (App. 40).

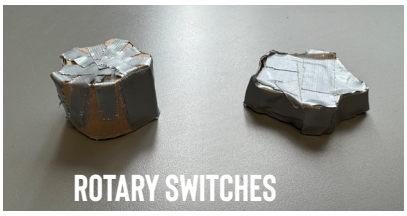

Ill. 122 - Rotary Switches

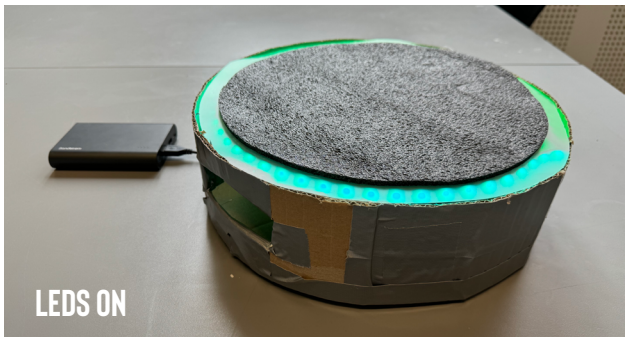

Ill. 123 - LEDs on

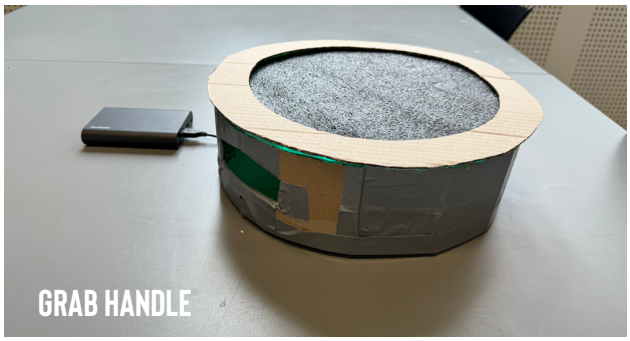

Ill. 124 - Grab Handle

The test was a simple setup where the Wobble Pad would be in one of two stages. The first one is with the LEDs illuminated, indicating that the interaction should happen on the dynamic surface using a foot. The second one is with the LEDs off. This stage indicates that the interaction should be with the handle incorporated into the side of the Wobble Pad. A variant of this with rotary switches was also tested to try the different methods of hand interactions. During testing, oral feedforward and feedback were given using the Wizard of Oz method (Ramaswamy & Rosala, 2024)

SUM-UP

The test showed that the children understood the separation of the foot and hand interactions in terms of which goes where (Ill. 125 - Ill. 127). However, they had trouble determining when to interact with the dynamic surface rather than the handles (Ill. 128). This led to the realisation that multiple input methods might be too confusing. Instead, it was decided that only one interaction point, the dynamic surface, would accommodate all interactions. In this regard, the required foot or hand interaction would be highlighted within the Wobble App before or during play.

THE WOBBLE PAD WILL FEATURE ONLY THE DYNAMIC SURFACE AS AN INTERACTION POINT FOR REGISTERING GAME INPUT



Ill. 125 - Using handles



Ill. 126 - Using rotating



Ill. 127 - Using foot



Ill. 128 - Does not understand where to touch

Registering Game Input

Due to the decision that the Wobble Pads would only require the dynamic surface as a point for registering game input, it was necessary to look into technology capable of this task.

The Mechanical and Tactile Solution

The initial thought was to implement a tactile switch (Smoot, 2024) for registering game input (Ill. 129). It was quickly realised that implementing this solution would require comprehensive mechanical work as it would need to actuate regardless of where the pressure would occur on the dynamic surface. This led to the development of a concept consisting of an upper plate (Ill. 130) with an underlying cross distributing the vertical forces from the dynamic surface to a central point for actuating a tactile switch (Ill. 131). However, this solution needed a limit so it would not overload the tactile switch with forces capable of ruining it. Therefore, telescopic towers with springs were implemented to counter this problem (Ill. 132).

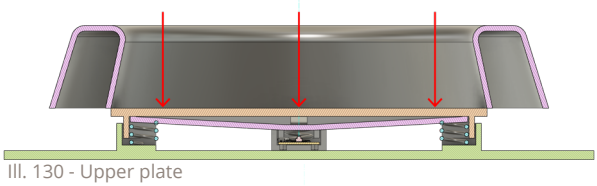

Ill. 130 - Upper plate

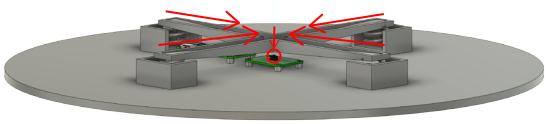

Ill. 131 - Underlying cross



Ill. 129 - Tactile Switch

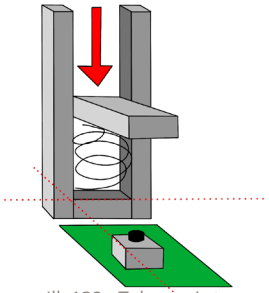

Ill. 132 - Telescopic towers

The Pressure Sensitive Solution

Soon after researching and developing the aforementioned mechanical solution with tactile switches, it was discovered that pressure sensors could register game input more effectively. Such sensors would enable adjusting the game input based on the pressure applied. This could realise the separation of foot interactions from hand interactions in a more technical manner as forces applied from standing on it would be greater than when simply tapping it with a hand. Another aspect favouring the pressure sensors is that they are one standard component compared to the more complicated assembly needed for the mechanical solution with a tactile switch.

It was quickly decided that pressure sensors would be the best approach for the Wobble Pad. In this regard, it was a matter of choosing the right type of pressure sensor, as this is a large market on its own (OMEGA, 2024). Two sensor types were considered and therefore researched further (App. 41). Their most noteworthy pros and cons are seen in Ill. 133 and Ill. 134.

It has been chosen to work with the piezoelectric load cell due to its small form factor and its ability to detect changes in pressures, making it possible to detect even light taps on the dynamic surface. While the sensor can still detect the difference between high and low pressure, it is nowhere near comparable to the performance seen in a strain gauge load cell. However, it has been decided that this drawback is outweighed by its other qualities, such as its form factor and ability to register forces across large areas, etc.

Piezoresistive sensor



Ill. 133 - Piezoresistive sensor

Characteristic:
- Detects changes in pressure through compression, shear, or bending stresses (the higher the pressure, the higher the electric charge)

Pros
- Very compact (flat sensor)
  - It can be tucked into narrow spaces
- Detects vibrations (highly sensitive)
- Various shapes and sizes depending on the application
- Great for registering pressure from large surfaces

Cons
- It does not detect static pressure
- Non-linear output
- It has a tendency to creep over time (becoming more inaccurate)

Strain Gauge Sensor

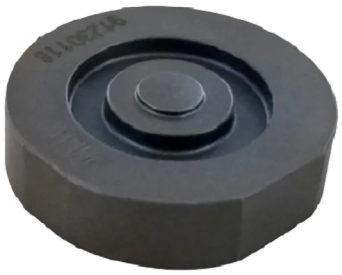

Ill. 134 - Strain Gauge Sensor

Characteristic:
- Detects pressure through elastic deformation (converting to an electrical signal)
- The output signal of the load cell is the voltage drop across this small change in resistance.

Pros
- Detects both static and dynamic pressures (weight, acceleration, pressure)
- Linear output
- Insignificant output drift when under load for a long time.

Cons
- Typically housed in durable and high, cylindrical structures (around 1 cm for smaller load cells)
- Measures pressure only at one point due to the linear inputting method.

SUM-UP

The piezoresistive sensors will be installed beneath the dynamic surface of the Wobble Pad to detect changes in pressure. Furthermore, four sensors will be installed to ensure Input registration regardless of where pressure is applied onto the dynamic surface (Ill. 135)

THE WOBBLE PAD WILL FEATURE FOUR PIEZORESISTIVE SENSORS

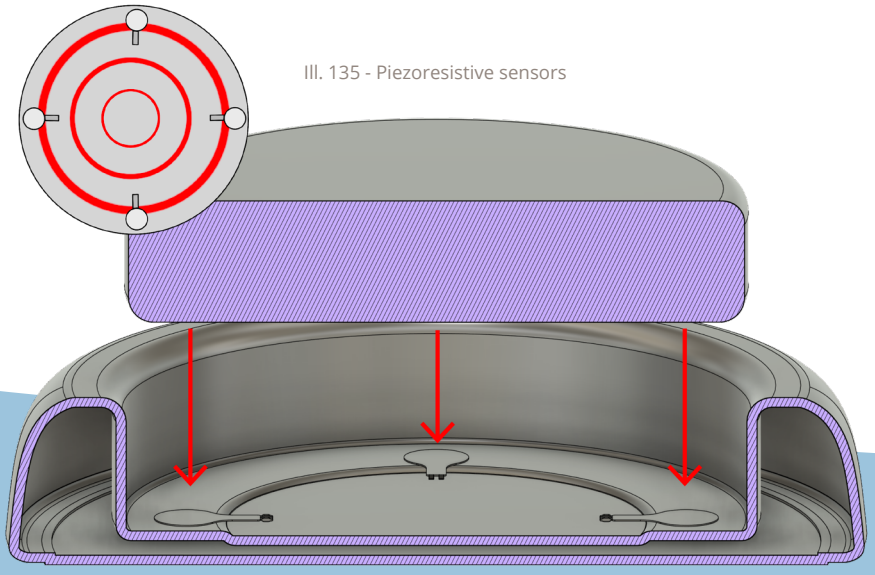

Ill. 135 - Piezoresistive sensors

Form Study

An essential part of the Wobble Pad is its overall shape and identity. This includes developing an outer shell for the dynamic surface and investigating its proportions (App. 42).

Shape Ideation of the Outer Shell

When ideating the outer shell's form factor, a few guidelines for the design were listed to stay within the theme of the domestic context and toy product typology. The guidelines are:

- Playful
- Domestic
- Durable
- Organic

This resulted in various simple shapes, all with a rounded and convex outer shell signifying a degree of playfulness and robustness (Ill. 136). Some of the shapes appeared sharper than others. Once again, the safety aspect resurfaced with the European Toy Directive (EUR-Lex, 2009), emphasising that accessible sharp edges must be reduced to avoid causing injury. This would eliminate all but the circular and square shapes from the selection. It was then decided to fall back on feedback previously given by the parent Rasmus mentioning that an utterly round shape is cool and versatile (App. 30). This resulted in the choice of working with the round shapes.

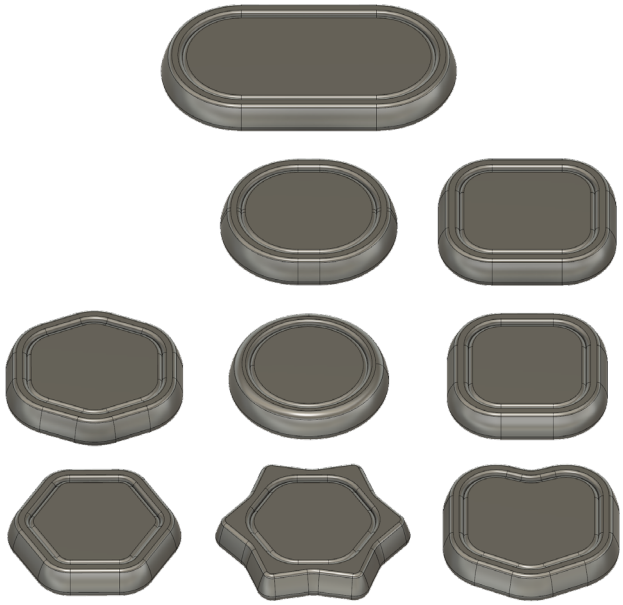

Ill. 136 - Shapes

The Aspect of Direction

An aspect that surfaced concurrently with the development of the shape was whether the Wobble Pad should feature a direction to distinguish between its front and back and left and right sides. This is also why some of the presented shapes are elongated. The reasoning behind this is the future scalability of what games could be featured on the Wobble Pad. Currently, there are no developed games where this is a requirement, but if it were to be in future games for the platform, it would be a significant expense to alter production to accommodate this change if it requires a change of the product shape.

Utilising the LEDs

While exploring whether the Wobble Pad would need to feature a direction, experimentation with the LED placement was initiated. In this regard, the LEDs were repositioned, moving away from the underglow at the bottom (Ill. 137) to visible light guides on top (Ill. 138). This would firstly mean that the surface of the floor would have no effect on the illumination effect and secondly, it also showed that it would be possible to indicate directions using four separate light guides for the LEDs placed in four different corners, each indicating a distinct direction when illuminated. This ultimately led to choosing the circle for the outer shell shape.

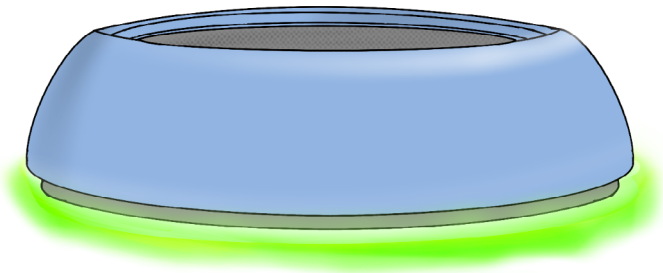

Ill. 137 - Bottom under glow

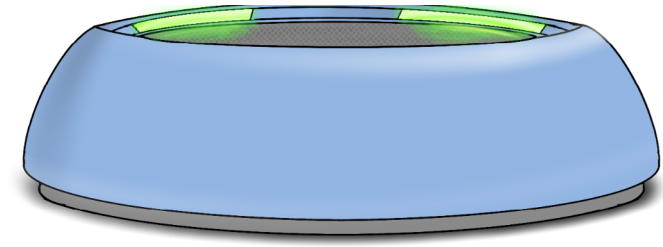

Ill. 138 - Visible light top

THE WOBBLE PAD WILL FEATURE A LIGHT GUIDE

THE WOBBLE PAD WILL FEATURE A CIRCULAR SHAPE

Segmenting the Shape

It was apparent that the rounded outer shell generated in the initial ideation of the outer shell's form factor was very bulky due to the construction looking like one big entity (Ill. 139). Therefore, it was ideal to look into segmenting the shape, making it seem lighter and more decoupled while not compromising the feeling of durability. This would also help tell the product's story highlighting what the different parts of the product are supposed to do. Thus, The segmentation was implemented by transitioning between heavy and light design features. This is seen between the outer shell and the now narrower bottom part, which signifies it is a stationary product (Ill. 140). Furthermore, colour and material contrasts have set the parts apart. This includes the contrast between the dynamic surface's rough and soft foam pad up against the smooth and hard surfaces on the outer shell. In this case, it signifies that the dynamic surface is for the activity interactions. At the same time, the outer shell encapsulates it prompting the user to interact only with the dynamic surface from above.

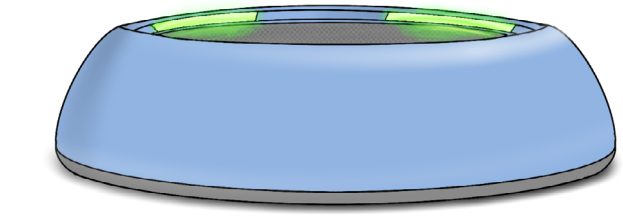

Ill. 139 - Original

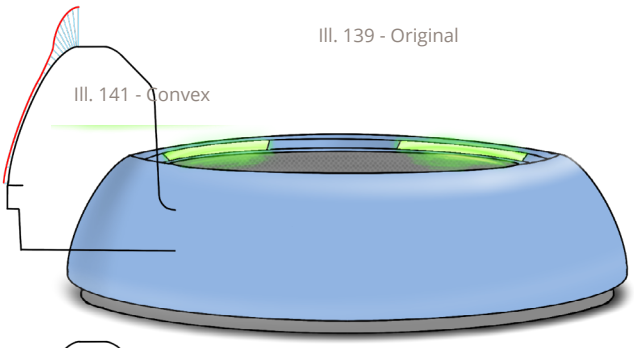

Ill. 140 - Narrow bottom

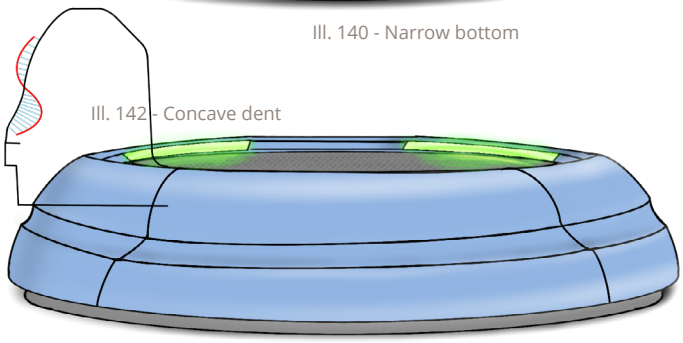

Ill. 143 - With concave dent

Creating an identity

While the segmentation of the Wobble Pad design has introduced several features to the product identity, it was still missing the wobbly "Wobble feeling". Therefore, it was decided to implement a slight concave dent (Ill. 142) into the otherwise convex surface (Ill. 141). This feature would also function as a subtle handle for grabbing onto the Wobble Pad, making it more ergonomic for carrying around (Ill. 143).

Connectivity and Power

In creating a game where input is required continuously from different Wobble Pads, it is essential that they can be powered and communicate with each other, sending, receiving and processing data. Various aspects of connectivity and power solutions have been studied in this regard.

Creating a Network

It is already known that the kind of data the Wobble System should be able to handle between the Wobble App and Wobble Pads are brief voice lines and sounds in a mono format (1 sound channel), but also commands (code) that can turn the LEDs on/off or change their colour. Therefore, file sizes and transfer rates were investigated (App. 43).

Of these, the transmitted audio files are assumed to have the largest file size at a time in the system. Therefore they were chosen as a starting point for calculating the file sizes transmitted between the Wobble Pads. As most of the game's sounds will be played on the tablet (Wobble App), and the low-quality-nature of the mini speaker installed in the Wobble Pads, it has been decided that the sound quality does not have to be top-of-the-line for the Wobble Pads. This means that a sound quality of 16-bit standard CD quality with a sample rate of 44.100 kHz will be sufficient for the task. Having selected this audio quality it is possible to find the file size required to store 1 second of an MP3 audio file. From the bitrate being 705,6 Kbps, the file size becomes 88,2 KB converting the bits to bytes (8 bits = 1 byte) (AudioMountain, 2024).

The voice lines transmitted around the system are up to two seconds. They are every 2 seconds in a fast-paced game, meaning the transfer rate per second needs to be no higher than 1,41 Mbps for a 2-second audio file per packet to prepare the next Wobble Pad for feedforward. The game's pace makes latency less of a factor, as feedback/feedforward does not need to happen instantly. In this regard, a latency of up to 100 milliseconds will be acceptable.

DATA TRANSFER RATE OF AT LEAST 1,41 MBPS

Choosing a Connectivity Protocol

Knowing that the system must be able to handle around 1,41 Mbps two different connectivity protocols, Wi-Fi and Bluetooth were investigated respectively (App. 43). The research showed that Wi-Fi would be a limitation and an exaggerated solution. Wi-Fi can handle large transfer rates of up to 1 Gbps, far beyond what is needed. Another limitation is that it is not always available depending on the user's location. This could be a limitation if the Wobble Pads were taken to an area out of reach from the network, like during visits to relatives or friends with no Wi-Fi access.

The Bluetooth protocol, and more specifically Bluetooth 5 Low Energy (LE), was determined to be more suitable for the use case as it has a transfer rate that is much closer to the requirement, with up to 2 Mbps.

Bluetooth 5 LE can also create a mesh network where the communication between Bluetooth devices can send and receive data interconnectedly (Bluetooth SIG, Inc., 2024) (Ill. 144). This allows communication between the Wobble Pads and the Wobble App which would be the central for the connections.

As Bluetooth has been determined as the best solution for the use case, it is essential to look at solutions that implement the technology at a low price. In this situation, looking at a solution such as the Raspberry Pi Pico W is obvious (Ill. 145). This microcontroller device can do more than connect to Bluetooth 5 LE. It can process the data, and it can establish the connections that would be needed to control other devices onboard the Wobble Pads like the implemented mini audio amplifier and speaker as well as the LEDs.

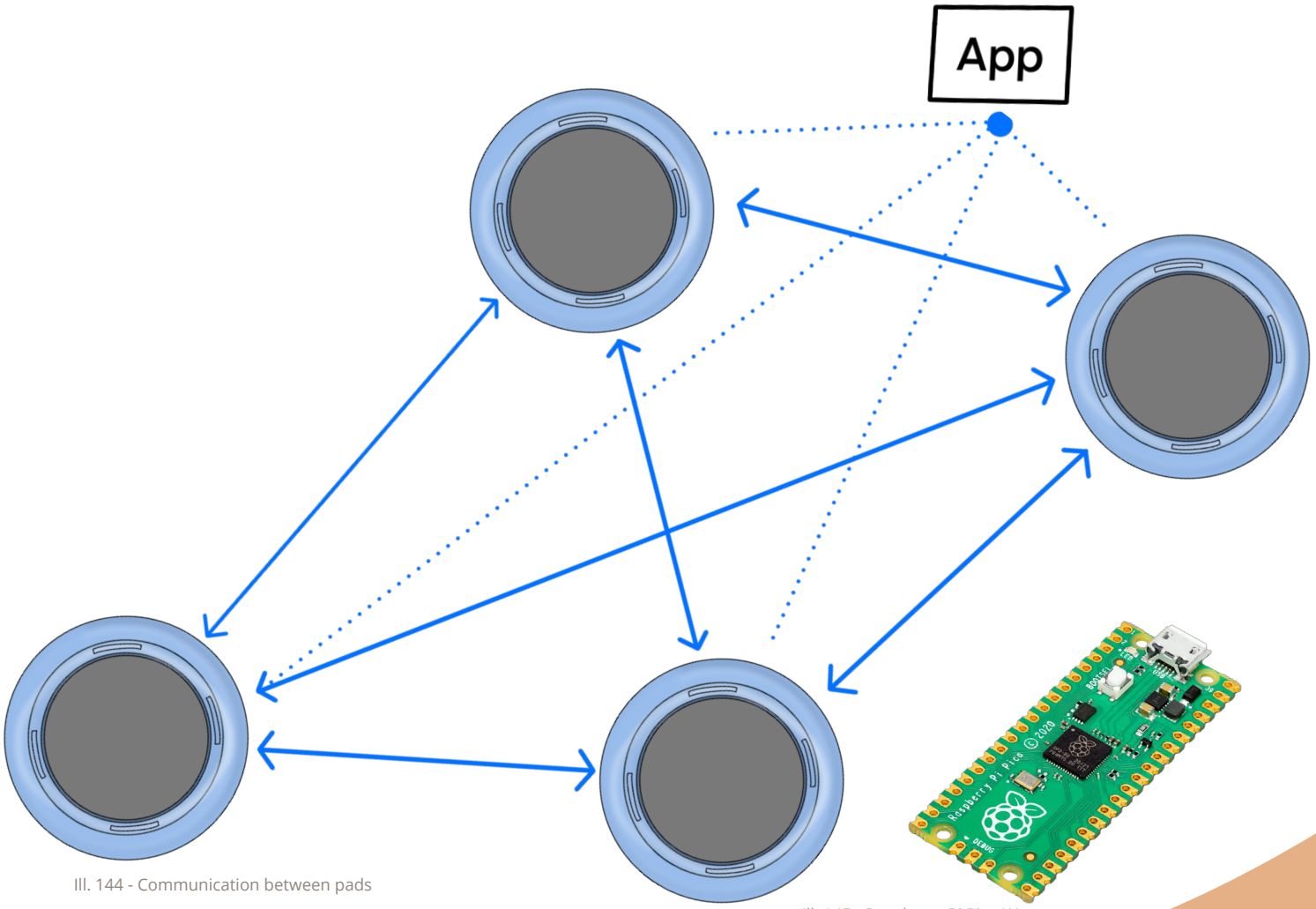

Ill. 144 - Communication between pads

Ill. 145 - Raspberry Pi Pico W

THE WOBBLE PAD WILL FEATURE A RASPBERRY PI PICO W

THE WOBBLE PAD WILL FEATURE BLUETOOTH 5 LOW ENERGY (LE)

Power On / Off

While designing the Wobble Pad, a thought came into play about how to turn the product on and off. This thought led to investigating the kinds of buttons already existing in the electronics market. (App: 44)

The study discovered that a button might not be the best solution for the Wobble Pad because of the interaction between children and the product.

The buttons considered would be problematic to incorporate into the design as there are multiple Wobble Pads to turn on, making it time-consuming and easy to forget.

Therefore, a different kind of on/off interaction was considered when looking into the charging method for the Wobble Pads (App. 45). The method in question is used in the Apple AirPods (Ill. 146). This product uses connection points instead of physical buttons. The connection points work as actuators when the AirPods are placed in their case, closing an electrical circuit. In other words, the AirPods deactivate and start charging when coming into contact with the connection points. Likewise, when they are pulled out from the charging case, they activate and connect to the nearest device, ready for use.



Ill. 146 - Airpods

Shaping a Charging Connection

As part of the decision regarding the connection points it was all down to shaping the pattern and position for the connectors to make the most of the method. Following a telephone interview with Søren Nielsen, an electrician at Meneta (Meneta Holding A/S, 2024) it was discovered that one connection point is always positive and one is always negative which is a thing to be cautious about as this is often used as a way to put a direction on the product. To decide on a shape for the connection a sketching round was done, demonstrating different approaches (the connections have been given custom names for recognition) (Ill. 147).

Ill. 147 - Connection point

Emilie	Ingrid	Simone	Sofie	Dorthe	Gudrun
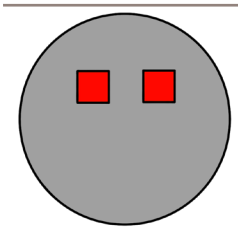	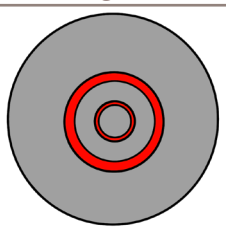	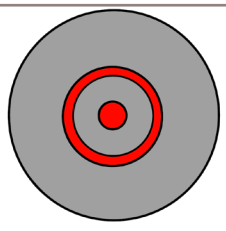	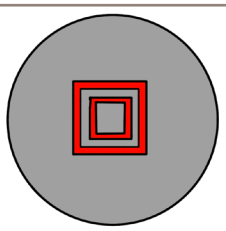	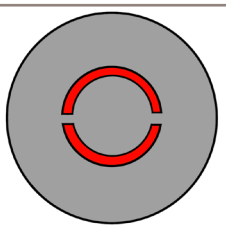	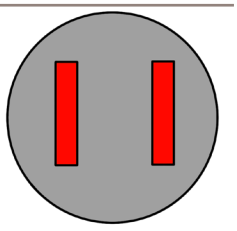
Pros: • Creates a direction for the product Cons: • Product direction • Small contact points	Pros: • Does not need product direction • Adapts in the charger Cons: • Waste material from cutting • Tight positioning	Pros: • Big contact point • Does not need product direction Cons: • Waste material from cutting	Pros: • Almost removed product direction Cons: • Needs product direction • Slim contact points	Pros: • Minimise product direction • Can be rotated in the dock Cons: • Waste material from cutting	Pros: • Big and convenient for managing charging. • Creates product direction Cons: • Creates a product direction

SUM UP

The shape of the Wobble Pad attempts to avoid a physical product direction, so it was chosen to consider only the connectors without the need for an orientation to charge. This also ensures that they charge as long as they are placed in/on the charging solution, making the experience convenient, quick, and easy to understand for even the youngest users. The chosen pattern was “Simone” because of the abovementioned factors. To implement the solution, it was decided to use cut 2 mm aluminium sheets as they are great electrical conductors while being lightweight, durable and corrosion-resistant (I.C.E Aluminium Pte Ltd, 2024)

Power source

Now that every electronic component needed has been sourced and implemented into the Wobble Pad, including the Raspberry Pi Pico W, the mini audio amplifier, LED lights, and sensors, a power source is needed to power them (App. 46).

In this case, the Wobble Pads must be distributed on the floor. This means a child is going to be running around between them. In this regard, it was chosen that it should not contain any physical wires running between a wall outlet and the Wobble Pads as they could become a safety hazard with a risk of tripping over them.

To make it safer and allow the Wobble Pads to be placed anywhere, a battery was chosen as the included power source for the Wobble pads. This would mean figuring out how long they should last before needing to be recharged. From previous research and the requirements, it was determined that a battery life of a minimum of two hours would suffice. The reasoning is that a child should at least use it for 15 minutes a day for postural control stimulation, while it is not unlikely that the Wobble Pads would be used more if two or even four children were to use them during a day. In this case, if they were to run out of battery after 15 minutes, it would limit play and social interactions. Consequently, these use cases could use up to around an hour daily. Also, To ensure that it is not necessary to charge them between every play session and to accommodate the extreme cases, it has been decided to double the battery life to at least these two hours.

After calculating the required power for the electrical components, it was found that at least a 12V battery with 1120 (mAh) capacity would be sufficient for two hours of use. This means that a 12V, 1200 mAh battery (Ill. 148) has been chosen as it was the closest standard to the required specifications. Through this, a new design requirement was found for the communication about the state of charge.



Ill. 148 - Battery

THE WOBBLE PAD WILL FEATURE A 12 V 1200 MAH BATTERY

WOBBLE PAD BATTERY LIFE OF 2 HOURS

BATTERY INDICATION

LEDs and speakers have been chosen to indicate the battery status of the Wobble Pads. The indication starts when the Wobble Pad is removed from the charger or reaches a new battery status. Then, it will use augmented feedforward (Wensveen, et al., 2004) to tell the current battery percentage with the speaker while the LEDs illuminate in one of four corresponding ways (Ill. 149)

Green: More than 50% charge

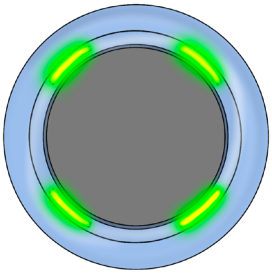

When the Wobble pad is at more than 50% charge, the LEDs illuminate in bright green while saying “Battery 100%”.

Yellow: Between 50% and 15% charge

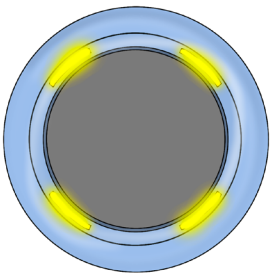

When the Wobble pad is between 50% and 15% charge, the LEDs illuminate in bright yellow while saying “Battery 50%”.

Red: Between 15% and 5% charge

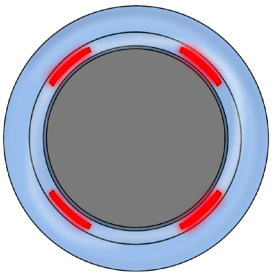

When the Wobble pad is between 15% and 5% charge, the LEDs illuminate in bright red while saying “Battery 15%”.

Blinking red: Below 5% charge

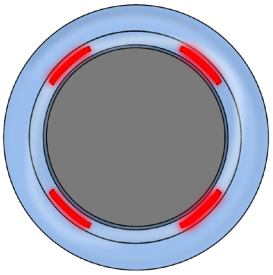

When the Wobble pad is below 5% charge, the LEDs illuminate in a blinking manner with a bright red while saying “Battery low”.

Ill. 149 - Batteri indicator

Construction and Production

The final part of the Wobble Pad development revolves around its construction and production, including materials, assembly aspects and durability factors.

Anti Skid Protection

Another safety aspect relevant to the Wobble Pad is that it does not slide around on the floor. In this regard, it was decided to have some kind of rubber padding for it to stand firmly in place. Looking at the different rubber types (AAG, 2024) it was decided to use a 4 mm thick, 65 shore A neoprene due to its great durability and flame resistance complying with the European Toy Directive about not being readily flammable (EUR-Lex, 2009). The rubber padding will be placed and circularly glued onto a 2 mm embossing below the bottom plate creating a 2 mm clearance from the floor (Ill. 150).

THE WOBBLE PAD WILL FEATURE NEOPRENE FEET

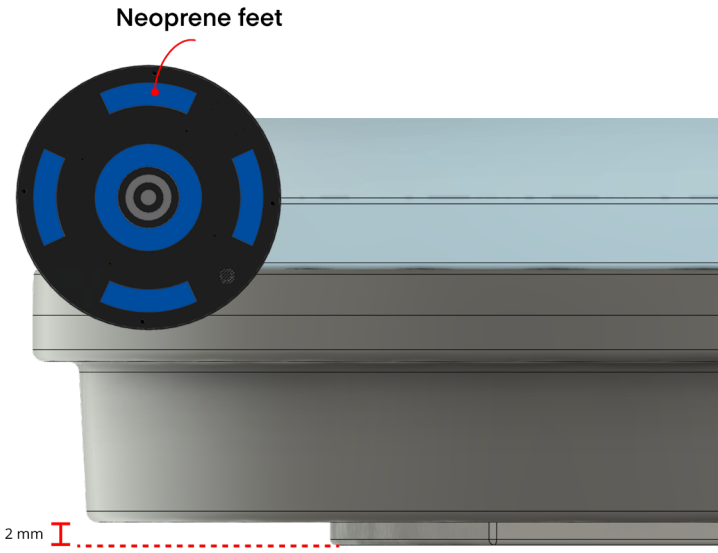

Ill. 150 - Neoprene feet

Mounting of Dynamic Surface

As the dynamic surface foam cushion is a contact patch susceptible to wear and tear over time it was decided that it should be replaceable if worn out. Inspiration was found in the detachable magnetic headrest on the Secretlab Titan EVO chair (Ill. 151). It was decided to adopt this concept, meaning eight circular 5mm x 2 mm neodymium magnets each capable of holding 0,65 kg would be implemented. Four are glued into 2 mm embosses below the dynamic surface and four are attached to the dynamic surface.

THE WOBBLE PAD WILL FEATURE MAGNETS

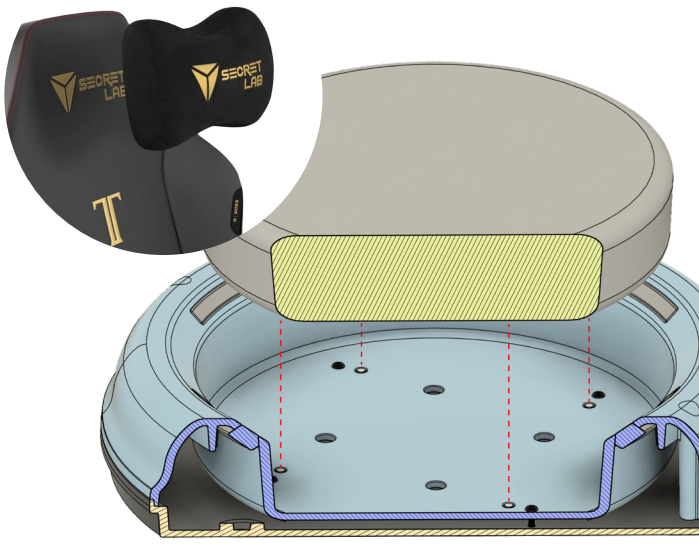

Ill. 151 - Titan EVO concept attaching dynamic surface

Internal Design

The Wobble Pad needs to house several electronics and components. This means creating internal design features making it possible to mount them appropriately. The only available space within the Wobble Pad as it already carries the dynamic surface is in the circular corridor created by the outer shell and the bottom plate (Ill. 152). In this regard, it was a priority to make the components only reachable from within to avoid the risk of loosening a screw holding the essential parts externally. In a worst-case scenario, a loose screw could also cause an electrical component to fail, which could be a safety hazard.

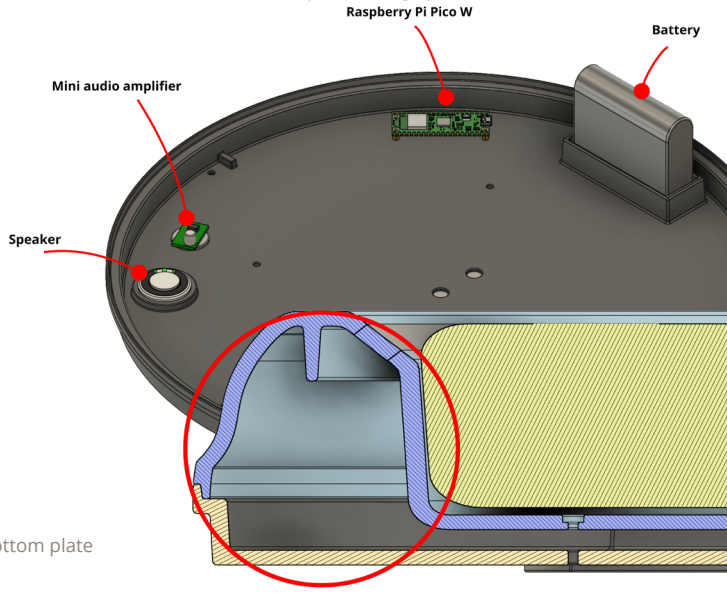

Ill. 152 - Bottom plate

Raspberry Pi Pico W Mounting

Mechanical fastening would install the Raspberry Pi onto the bottom plate, making it more easily replaceable if it malfunctions. This includes the placement of threaded brass inserts into the bottom plate with 5 mm standoffs between them and the Raspberry Pi. This makes it possible to screw it onto the bottom plate from the top before installing the outer shell (Ill. 153)

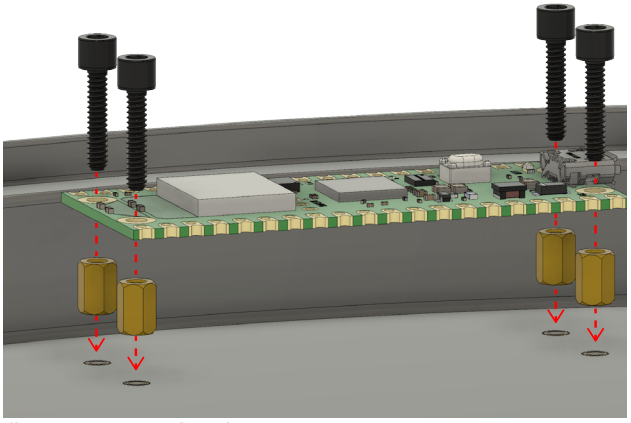

Ill. 153 - Fastening of raspberry Pi

Mounting of Sensors Charging points, Mini Audio Amplifier, Speaker, and Battery

On the bottom plate, the mini audio amplifier and the battery will be mounted with, 2 mm x 20 mm round sticky PE foam pads, while glue will be used to mount the speaker. The piezoresistive sensors and the aluminium charging points, respectively below the dynamic surface and bottom plate within a 2 mm embossing will also be mounted with glue. At the same time, cut out holes have been made for wire routing (Ill. 154 & Ill. 155). The use of glue is mainly justified because no mechanical fastening options are available for these components. Additional design features have also been implemented into the bottom part to mount the speaker (Ill. 156) and battery (Ill. 157), and exclusively for the battery in the outer shell (Ill. 158). This will hold the components in place.

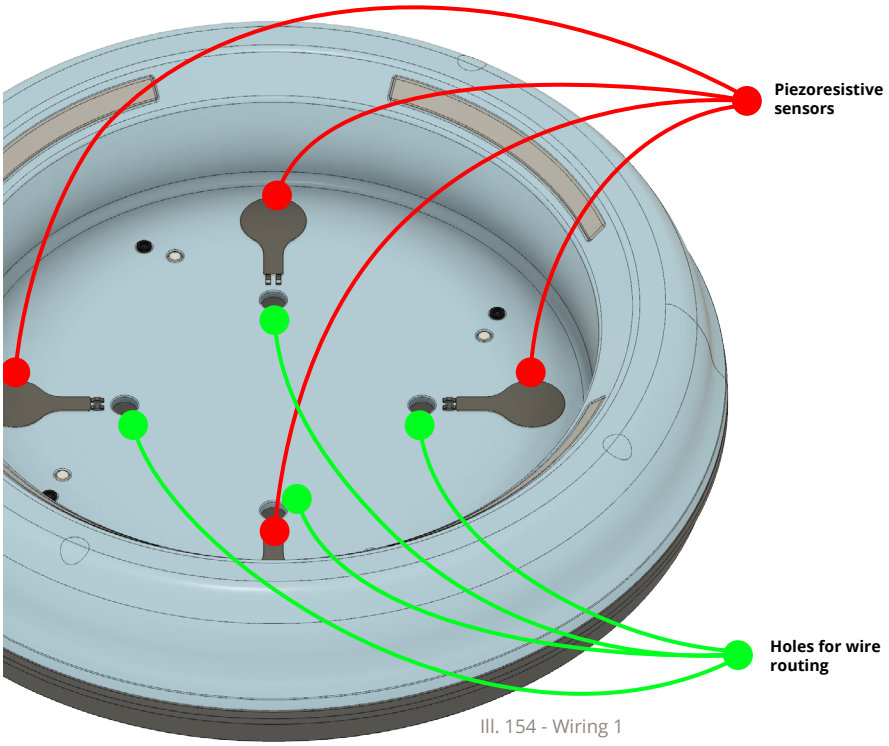

Ill. 154 - Wiring 1

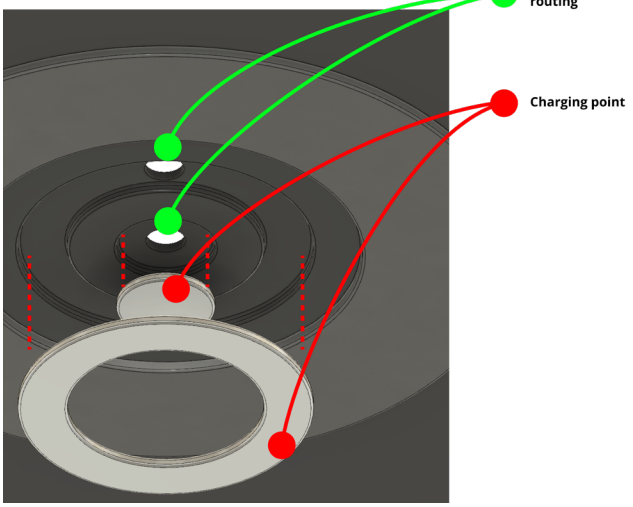

Ill. 155 - Wiring 2

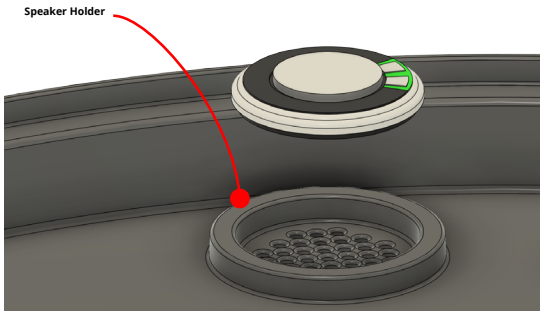

Ill. 156 - Speaker mount

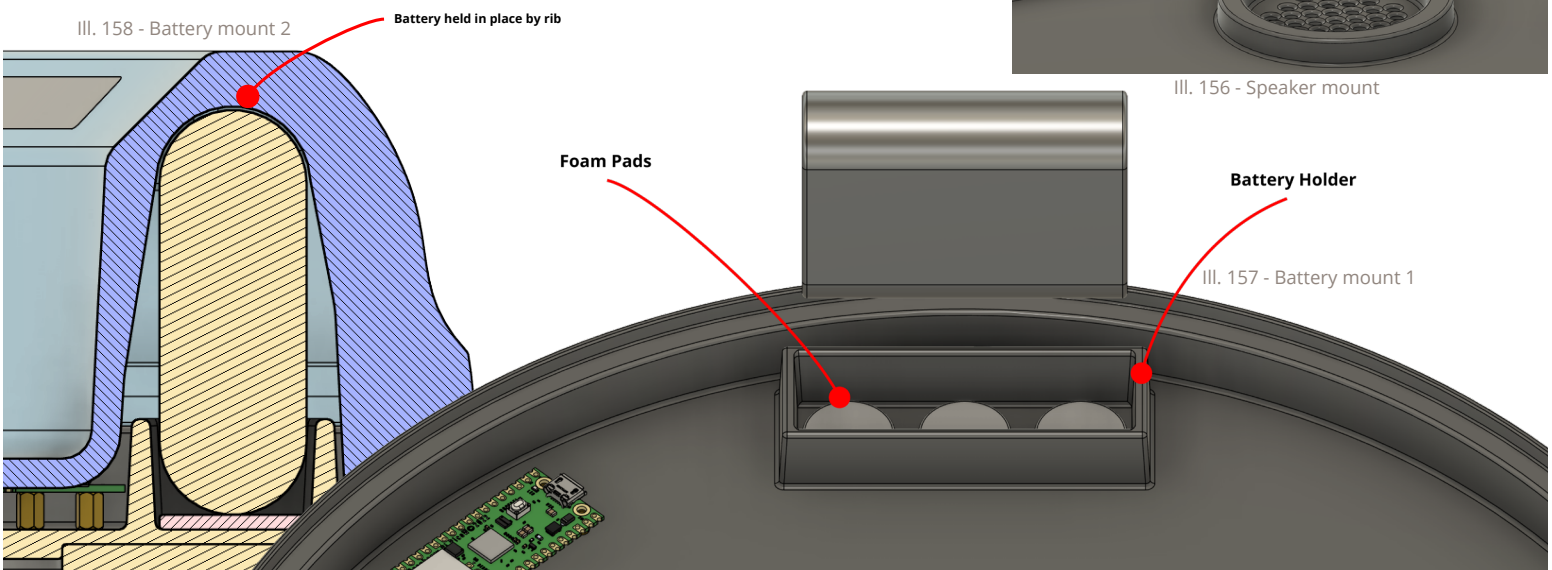

Ill. 157 - Battery mount 1

Ill. 158 - Battery mount 2

Mounting of LEDs and Light guide

The LED strips have been placed in the outer shell's top part, so a design feature has been added to the outer shell to accommodate the mounting. The LEDs will also be supplemented by a custom light guide to diffuse the lights, distributing the individual lights from the diodes more evenly on the external side (Ill. 159). This part will be custom-made to fit into the Wobble Pad's outer shell with screws.

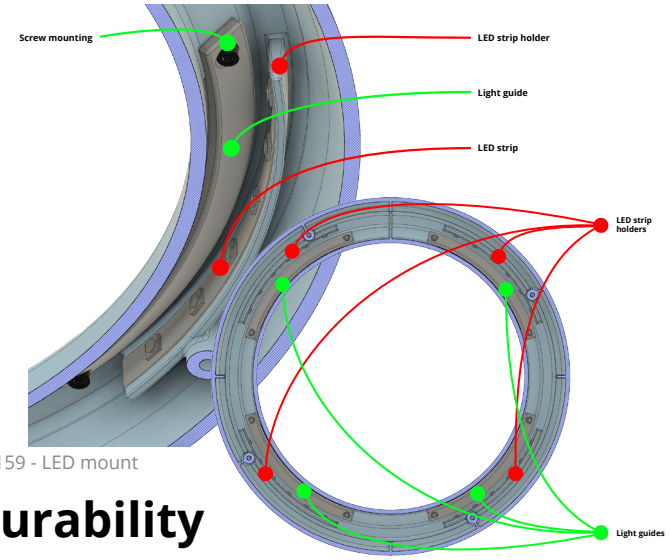

Ill. 159 - LED mount

Material Considerations and Durability

Due to the complexity of the Wobble Pad shape and its product typology as a toy, it was decided that it should be made of a plastic material with great durability and options for colouring. The initial thought was therefore to look at thermoplastics like ABS and PC plastics or even a blend of these. But before choosing either, a finite element analysis (FEA) was needed to determine whether they would suffice (App. 47).

FEA Durability Testing

The Wobble Pad, a product meant for activity and training for children, becomes very susceptible to wear and tear over time. In this regard, an FEA analysis has been made to find possible weaknesses in the construction and materials based on extreme use cases with the product. The use cases that have been investigated have been observed during normal use of the product where scenarios of heavy weight on top of the Wobble Pad have been the most noteworthy to test in different areas (Ill. 160 & Ill. 161))

The forces used for the simulations will be based on the average weight of a 7-year-old which has been found from previous sections to be 29 kg. For simplification reasons, this will be rounded to 30 kg. The weight will be used as a baseline for the testing, with a safety factor of four added to account for more extreme scenarios. The applied weight, 120 kg, is estimated to be 1200 N of force.

Ill. 160 - Hand





Ill. 161 - Foot

The testing accounts for three scenarios:

1. An evenly distributed force on the outer shell's topside simulates an evenly distributed load from the foam cushion above (Ill. 162).
2. A concentrated force on the base on the topside of the outer shell, simulating a heavy force on one point while still being a force transferred through the foam cushion above (Ill. 163).
3. A concentrated force on the outer shell's top edge, simulating a heavy force on one point. In this case, it will not consider forces through the foam cushion (Ill. 164).

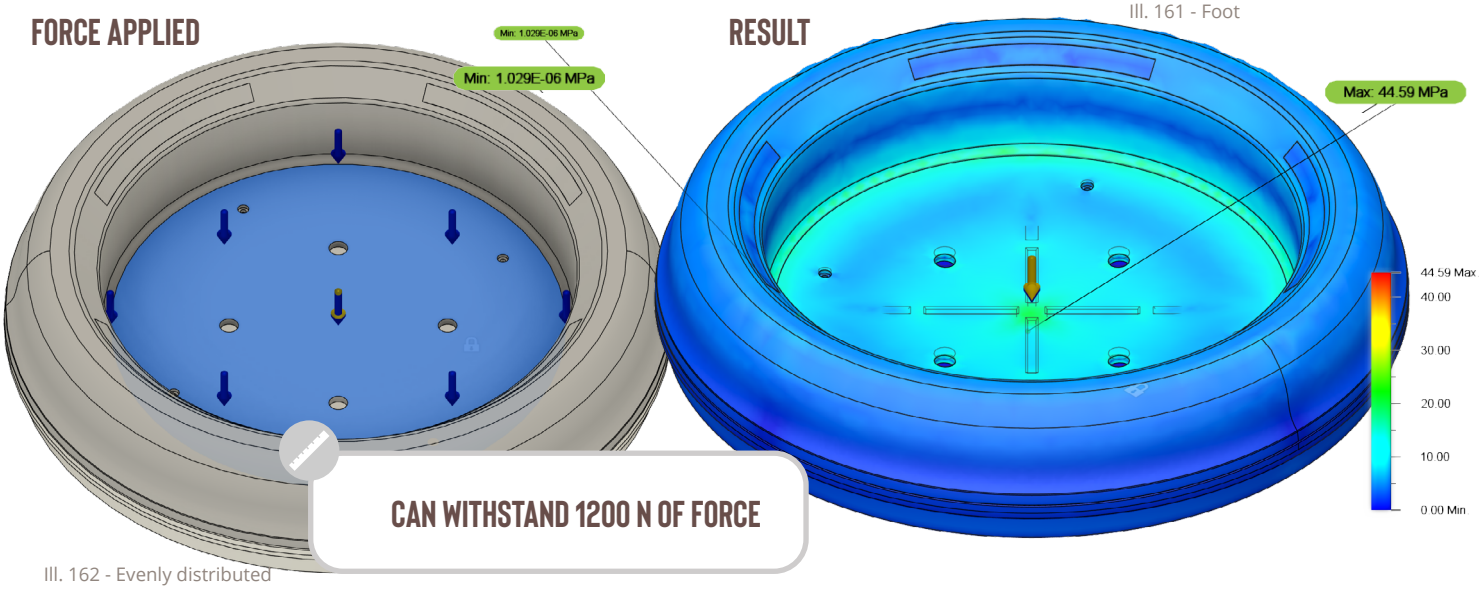

Ill. 162 - Evenly distributed

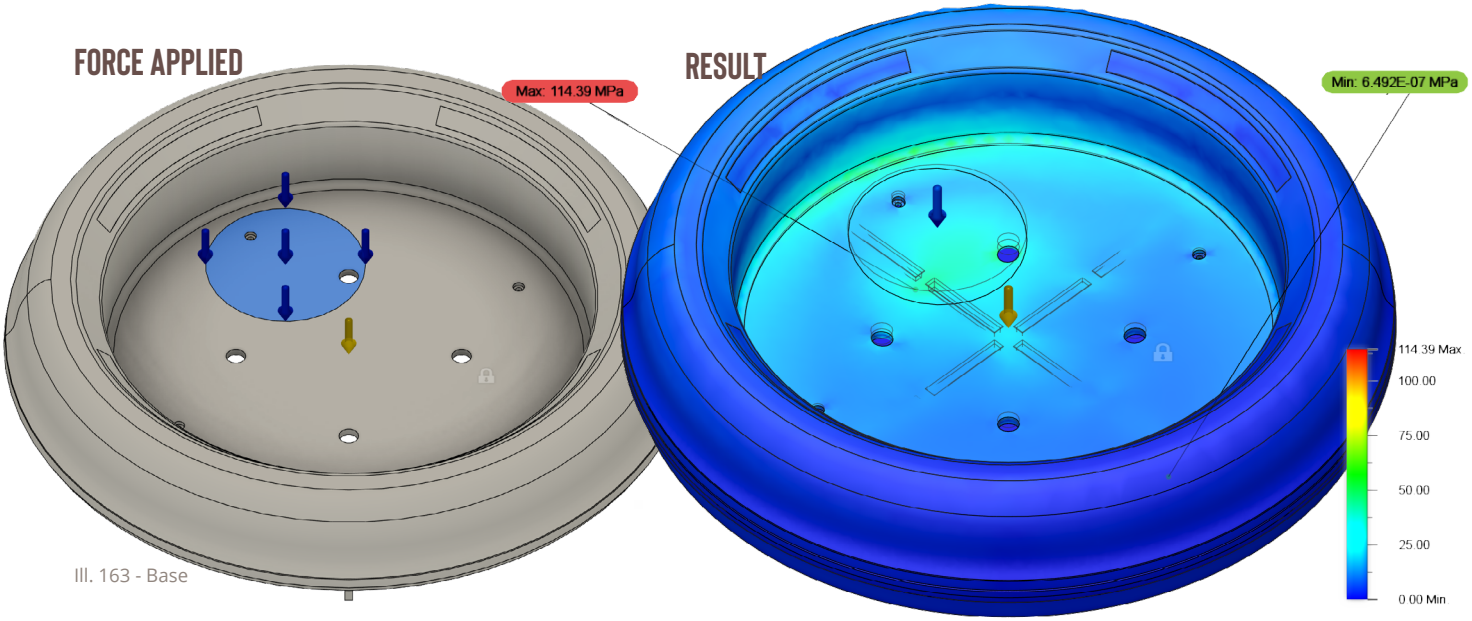

Ill. 163 - Base

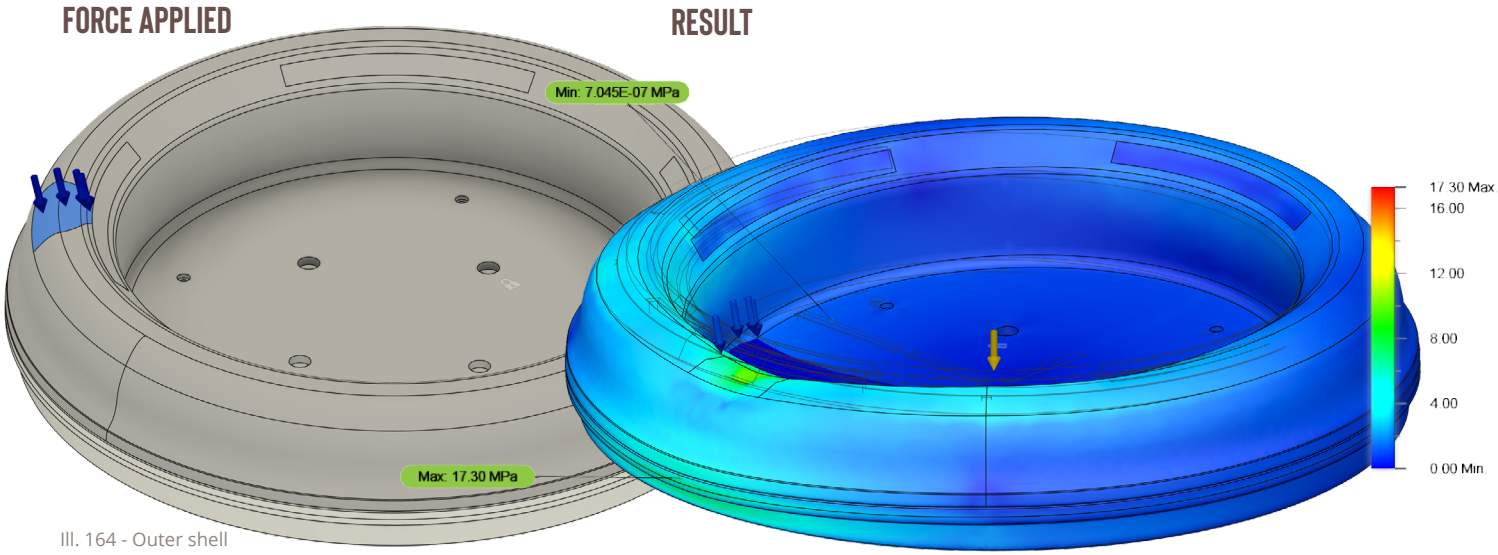

Ill. 164 - Outer shell

1. From the first test, it has been shown that a stress concentration of up to 44,59 MPa will appear in the middle of the outer shell which means ABS with a yield strength of 20 MPa will not be strong enough to survive an evenly distributed force of 1200 N without plastic deformation.
2. From the second test, stress concentrations of up to 114,39MPa would exceed the yield strength of even the most durable materials, like PC, which has a yield strength of 62 MPa. This exact test was an extreme case, so it should be noted that stress concentrations of this size would rarely appear.
3. The highest stress concentrations from the third test were only 17,3 MPa, which shows that the structure's top is very tough and, therefore, resistant to forces.

CHOICE OF MATERIAL

Taking the FEA results into account, it was decided that a blend of ABS and PC would be the most appropriate. It can withstand stress concentrations of up to 56,3 MPa, which would survive all but the second test. Additionally, it would retain many versatile qualities found in ABS, like shiny and colourful finishes, while at an overall lower cost than pure PC. Pure PC will, however, be used for the light guides due to its transparency, great light-guiding properties, and durability.

Testing of foam at Skumhuset (Skumhuset, 2024) also showed that the dynamic surface should be made of high-resilience PUR foam at a density of 50kg/m3 with a stiffness rating of 200 N to challenge the children's postural control. The PUR foam will also receive a 1-2 mm PUR coating to make the foam more resistant against wear and tear and more cleaning-friendly. The coating will also leave a slightly rough surface making it less slippery (App. 48).

Knowing all the materials and components now needed in the Wobble Pad, the weight could be estimated at 1.2 kg, which was within the acceptable limit previously set to 3kg.

THE WOBBLE PAD WILL FEATURE PC/ABS AS PRIMARY CONSTRUCTION MATERIAL

THE WOBBLE PAD WILL FEATURE PC AS LIGHT GUIDE MATERIAL

THE WOBBLE PAD WILL FEATURE PUR FOAM WITH A 2 MM COATING

Production and Assembly of Parts

Several production methods were considered for the outer shell, bottom plate, and light guide, including vacuum moulding and injection moulding (App. 49). Vacuum moulding would include several post-processes of CNC milling, including milling of holes, grooves, etc. This would add a lot of cost to a method that might not be the most appropriate for the product. On the other hand, injection moulding would be able to implement many of these processes automatically as part of the moulding process while retaining a high grade of design complexity.

As part of the injection moulding decision, it was chosen to visit professionals at Partdesign ApS (PARTDESIGN ApS, 2024), where Leif (Ill. 165) and Christian (Ill. 166) helped create an understanding of the design principles required for injection moulding. One of the critical aspects was in terms of assembly where it was emphasised that the joining method between the outer shell and the bottom plate should be reconsidered due to transverse screw holes in the current solution not being possible to produce with a singular pull direction (Ill. 167). These had originally been meant for fastening L brackets as part of a plan to be able to disassemble the product if repairs were needed. However, a solution of using screw bosses was instead proposed (Ill. 168 & Ill. 170) as a supplement to the lip assembly method (Ill. 169) implemented on the edges to retain a smooth transition between the parts.

The last aspects of production relate to the aluminium charging points, the neoprene and the PUR foam. They will all be cut to size with appropriate tools.

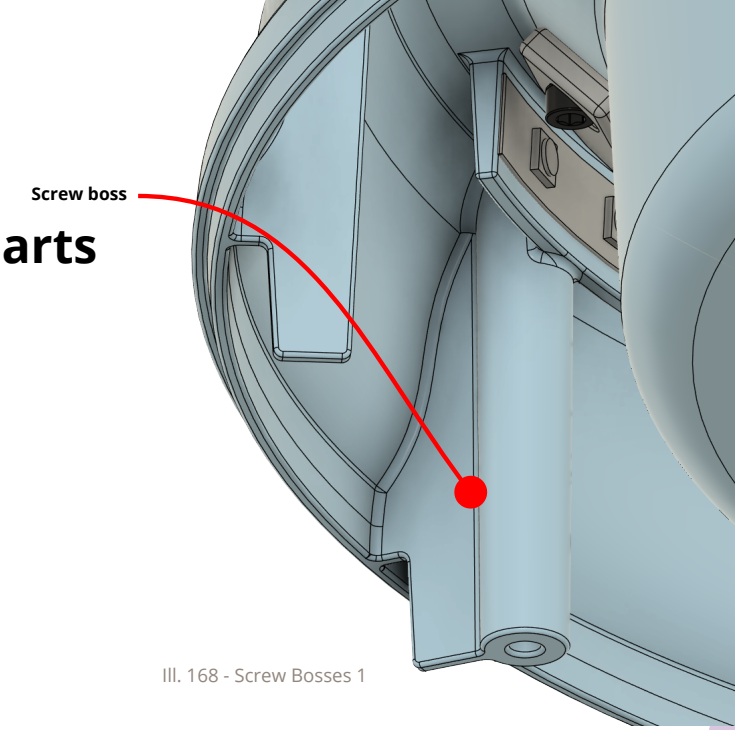

Ill. 168 - Screw Bosses 1

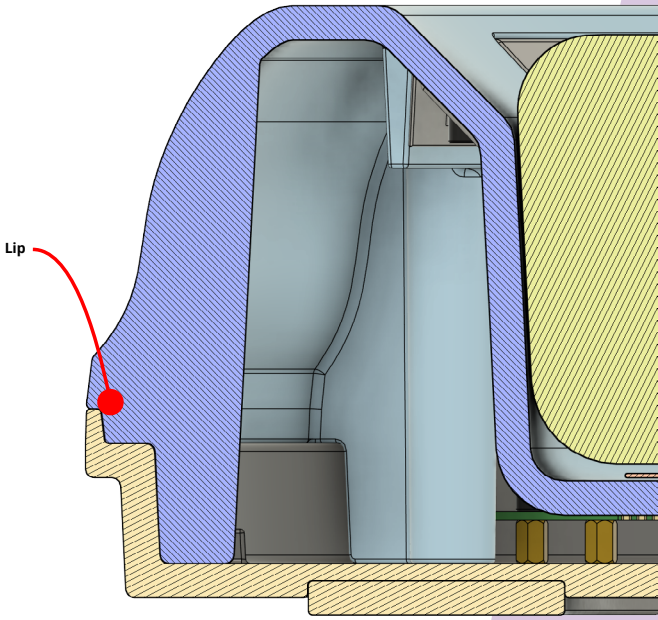

Ill. 169 - Lip Assembly



Ill. 165 - Leif



Ill. 166 - Christian

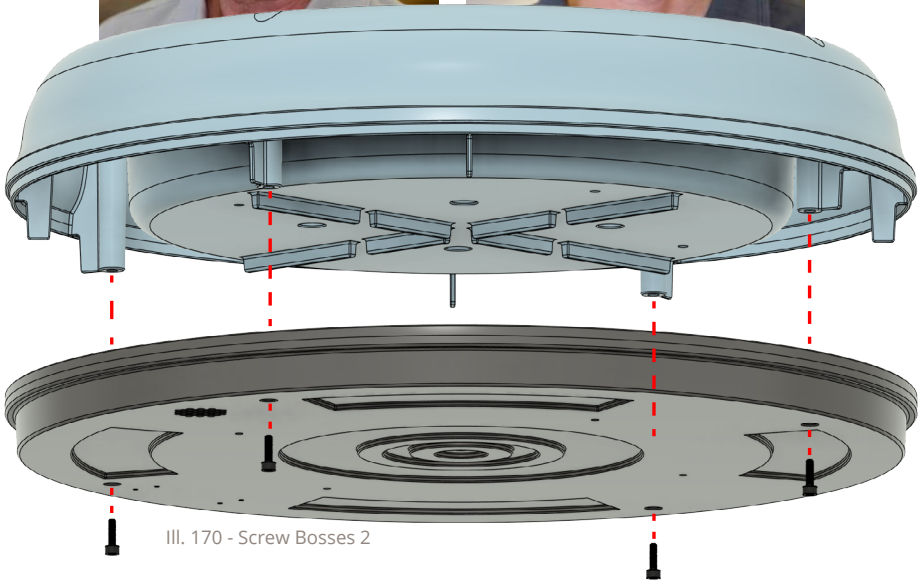

Ill. 170 - Screw Bosses 2

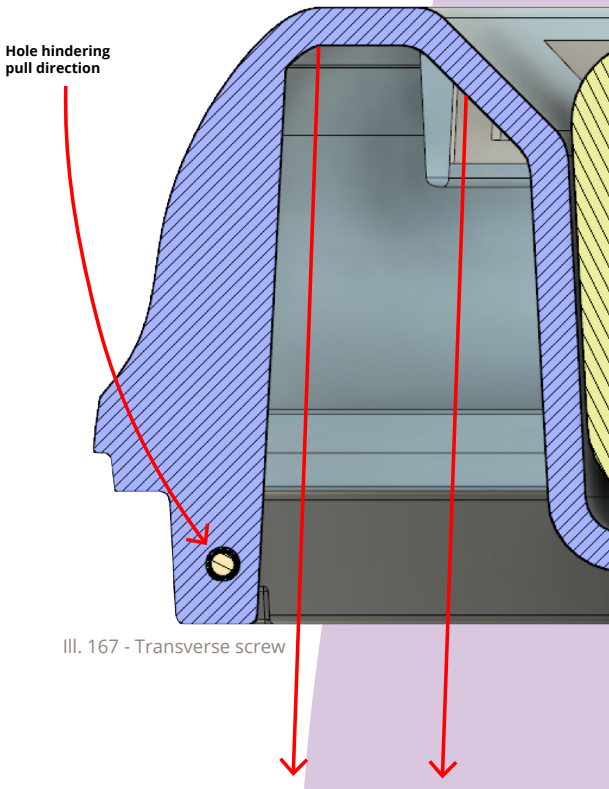

Ill. 167 - Transverse screw

Sum Up

Through this phase, the Wobble Pad has been developed and detailed for active play with an emphasis on simplicity, durability and playful design features. This has led to a singular interaction point implemented as part of the dynamic surface in its PUR-coated foam variant. Meanwhile, the outer shell has been made in PC/ABS encapsulating the dynamic surface in an organic, playful and durable shape. Furthermore, the outer shell also protects internally installed electrical components on the bottom plate like the battery, speaker, mini audio amplifier, and the Raspberry Pi Pico W capable of connecting the Wobble Pads to an internal Bluetooth network. For interaction purposes, the implementation of RGB LEDs behind a diffused PC light guide has made it possible to indicate game interactions and battery status. In this regard, the battery has become chargeable with a connection to aluminium discs acting as charging points and actuators for the product's on/off state.

Wobble Pad Requirements

No.	Need	Imp.	Units	Reference
1	Include an active physical product	5	-	Use of Digital Media for Training Gross Motor Skills, p. 17
2	Contain a dynamic surface	3	-	Testing out Equipment, p. 28
3	Active digital media consumption	4	-	Use of Digital Media for Training Gross Motor Skills, p. 17
4	Oral and visual feedforward and feedback	3	-	Challenging the Play Twister Concept, p. 38
5	Avoid damage to furniture and interior decorations	3	-	The Context, p. 25
6	Can freely be moved to different locations during play	3	-	The Playground, p. 23
7	Set up and clean up time: 5-10 minutes	3	Min.	The Context, p. 25
8	Main setup on the floor	3	-	Concept Feedback, p. 35
9	Minimum diameter of dynamic surface, Ø = 25 cm	4	cm	Size Testing of Dynamic Surface, p. 62
10	Maximum height of, H = 7 cm	4	cm	Size Testing of Dynamic Surface, p. 62
11	Maximum weight of 3 kg	5	kg	Weight, p. 62
12	Data transfer rate of at least 1,41 Mbps	4	Mbps	Creating a Network, p. 68
13	Wobble Pad battery life of 2 hours.	4	Hours	Power Source, p. 71
14	Can withstand 1200 N of force	4	N	Material Considerations and Durability, p. 74

Ill. 171 - Wobble dock



Phase 06
Development of Wobble Dock

In this project phase, the Wobble Dock has undergone development, This includes a breakdown of the critical points regarding the use of the Dock, its overall shape, how the Wobble pads are mounted, and the power to charge them all simultaneously.

Charging

Now that the Wobble Pad has been developed, the goal with the Wobble Dock is to ensure a "home" for the Wobble Pads and a charging station to keep the games going. This means that the Wobble Dock should be able to store and charge the Wobble Pads when not in active use.

Power supply

In Phase 5, it is explained how the Wobble Pads are charged through the connection point at the bottom of the product. A system of power delivery is needed to recharge all 4 pads successfully.

For power delivery, it will need to be charged from 0 to 100 % within two hours. This will ensure that the games can continue within a reasonable time frame.

Wiring of Charger

It is important to notice that the electric circuit plays an important role in making this possible.

If the eclectic circuit is built up as Ill. 173 there is a potentially high risk of starting fires or melting the batteries because the regulator does not know where to send the power and how much. To prevent this, the regulator must be integrated into the batteries as seen on Ill. 172 (Søren Nielsen, electrician, Meneta)

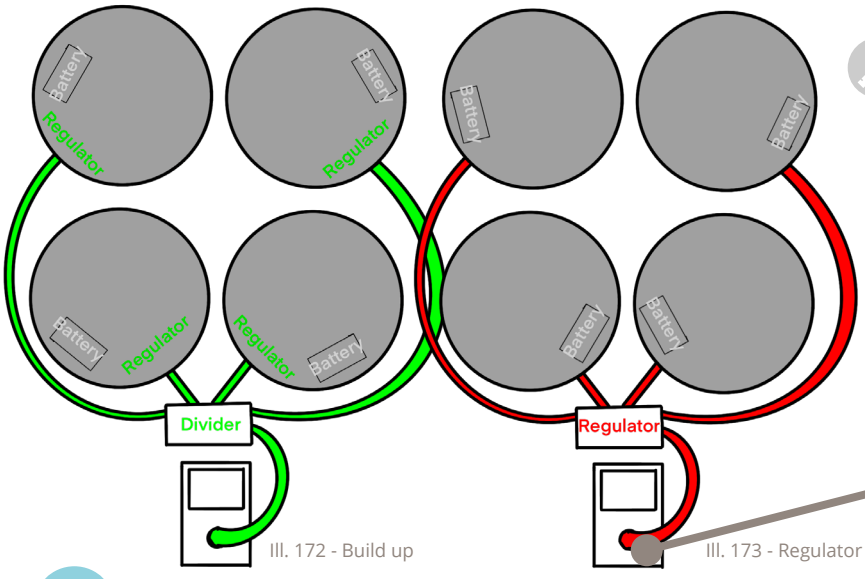

Ill. 172 - Build up

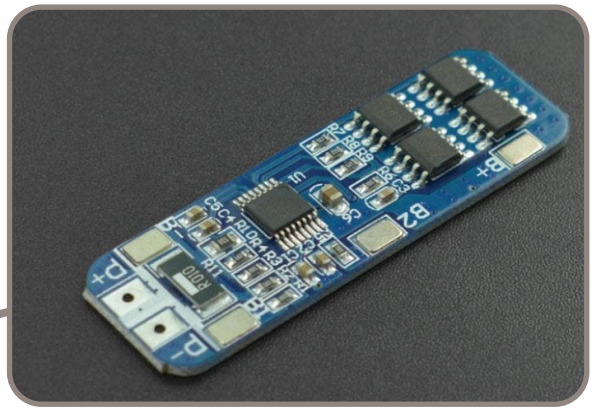

Ill. 173 - Regulator

CHOICE OF BATTERY

The battery is 1,12 (Ah) per Wobble pad.

4 X 1,12 (Ah) = 4,48 (Ah) 4480 (mAh)

With 12 volt

Watt = (Ah)* (V) = 53 W

With a power transfer loss of 5 to 10% in mind, a 60 W would barely be enough which is why

A 70W 12V power supply would be a good choice.

~~REDUCTION OF SIZE WHEN NOT IN USE~~

CAN CONTAIN AND CHARGE FOUR WOBBLE PADS

CAN PROVIDE 70 WATTS, 12 VOLTS OF POWER

CAN RECHARGE WOBBLE PADS WITHIN 2 HOURS

SUM UP

Through this investigation of charger wiring, there has been an improvement in the overall understanding of the construction within Wobble Pad with an introduced regulator. It was essential to understand the electric circuit to -

- Be able to deliver enough power to ensure the 2-hour charging goal.
- Ensure the product is safe to use and no harm can be done.

THE WOBBLE PAD WILL FEATURE A REGULATOR

THE WOBBLE DOCK WILL FEATURE A DIVIDER

Shaping the Dock

For shaping the Wobble Dock, the critical aspects of the design were looked into including a map created to understand and visualise the essential elements. This functioned as a brainstorm for solutions to the different situations it should be able to handle. The elements of the user were also brought into play alongside the communication processes necessary between the Wobble Dock and the user (App. 30).

A crucial part of the design is charging the "Wobble Pad" while being able to communicate with the user. The mapping below shows the considerations and choices of when and how communication should take place (Ill. 174).

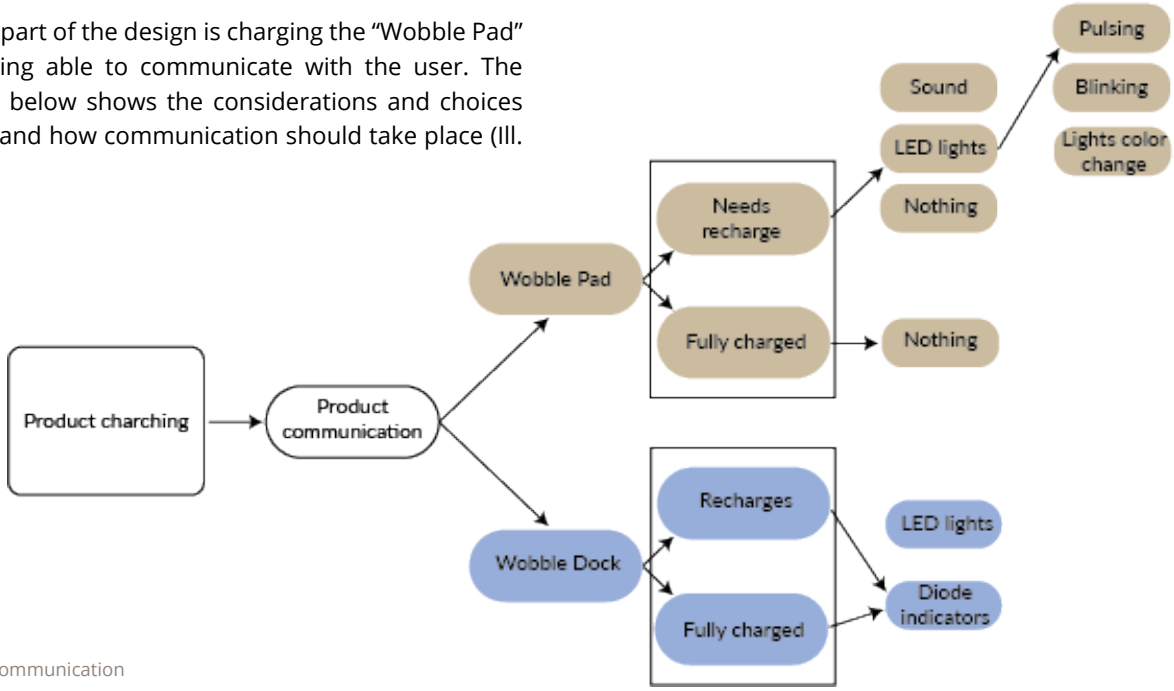

Ill. 174 - Communication

Another crucial part of the design concerned transportation. To further visualise what this meant for the product, a second mapping system was created (Ill. 175).

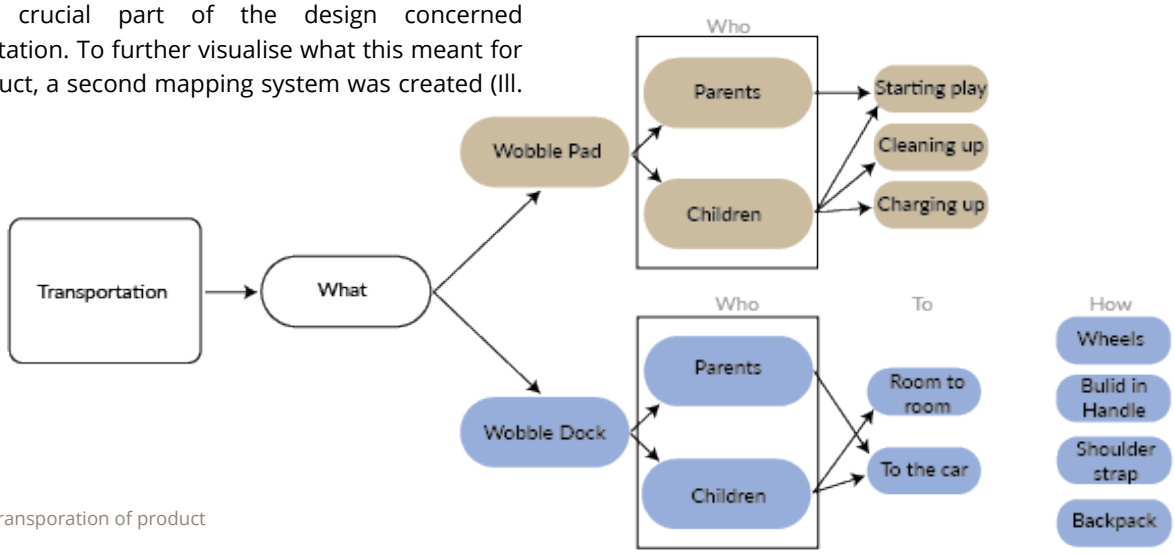

Ill. 175 - Transporation of product

SUM UP

With the mapping of transportation and charging, it was possible to generate further design requirements for the "Wobble Dock."

VISUAL INDICATION OF CHARGING STATUS

CAN BE TRANSPORTED

After the first round of sketching and 3D models, mock-ups (Ill 176) were made from the ideas with the most potential. The 3D models showcased the aesthetics, while the mock-ups gave the user an understanding of the product's dimensions. Both were brought to an interview in Leos Legeland (App. 50) to gather more ideas and opinions on the concepts for the Wobble dock.

Ill. 176 - Dock Mock-ups





Feedback on Concepts



Ill. 176 - Pizzabox

Pizzabox

Multiple stacked boxes provide a clear indication of where each Wobble Pad goes. The technology can be put inside each of them.

User feedback: (App. 50):

"It's very square and missing something?"
- Anders and Stefanie

"This one is cool, aesthetically, it's very strict, and I like that it's minimalist in my home."
- Heidi

"It's a really nice square box that's easy to organise and does not collect dust."
- Maren and Tine

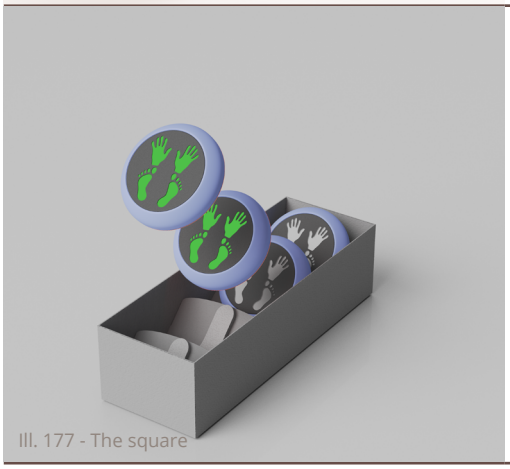

Ill. 177 - The square

The square

As seen in Phase 3, a square box with inserts to accommodate the charging technology. Angled plates to hold the Wobble Pads and make it convenient to grab and place them back in the box.

User feedback: (App. 50):

"It is very large; the more compact, the better."
- Anders and Stefanie

"I would leave it for everyday use but remove it when guests came."
"It looks like something you had LP records in."
- Heidi

"It collects dust, and I would be tired of that."
"Animals will use it as a shelter; at least my dog will."
- Maren and Tine

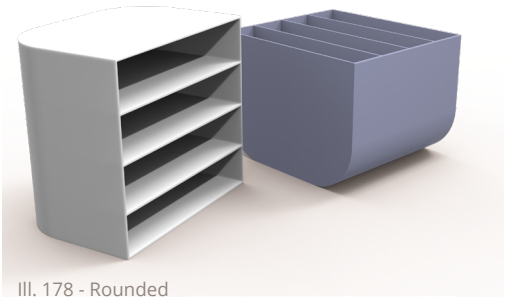

Ill. 178 - Rounded

Rounded.

A squared look with a curved backside that offers more than one positioning of the Wobble Dock in the home.

User feedback (App. 50):

"It is so smart that it can both stand and lie down—clearly the best one, and I would not mind having it in my home."
- Anders and Stefanie

"I like this version the best; it has everything the other one has, but it is better."
- Heidi

"Definitely this one, I really like that there's something more going on with the lines than just being square."
- Maren and Tine

SUM UP

The shaping of the Wobble Dock has made it clear that the development is on the right track. The users liked the concepts and provided their concerns and positives about the three concepts. This has made it possible to decide about the shape and further develop the smaller details, such as grabbing and placing the Wobble Pads into the Wobble Dock, as well as the product's dimensions. The concept "Rounded" was chosen for further detailing in this case.

Shape Development

Now that the overall shape of the Dock has been chosen, further development has been initiated. This particular design dive was about the front of the product. It needed something more than a straight line from side to side. Also, it needed to be recognisable and representative of the design of the Wobble Pad thereby trying to merge the two products into one and create some product recognition.

For this, a sketching round was initiated for the shape of the front (Ill. 179)

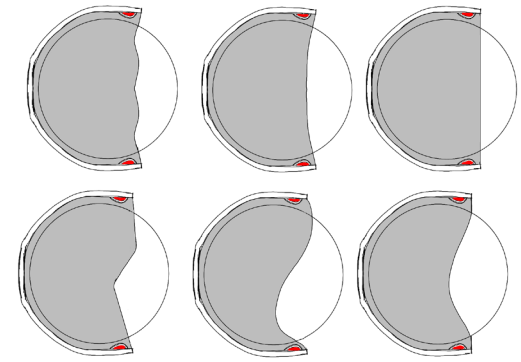

Ill. 179 - Shaping

After doing the shaping, ideas start to emerge. The rounded back should match the "Wobble Pads" curve.

The bottom of the dock should be straight to support multiple placement solutions.

The front should be playful and easily accessible for the children.

During a brief discussion about the different shapes, a comment was made that one looked like an alignment or an identifying feature from the Wobble Pad.

Without just copying and pasting the Wobble Pad feature, the final version of the front shape became a mixture of the feature and the first iterations (Ill. 180) on the subject.

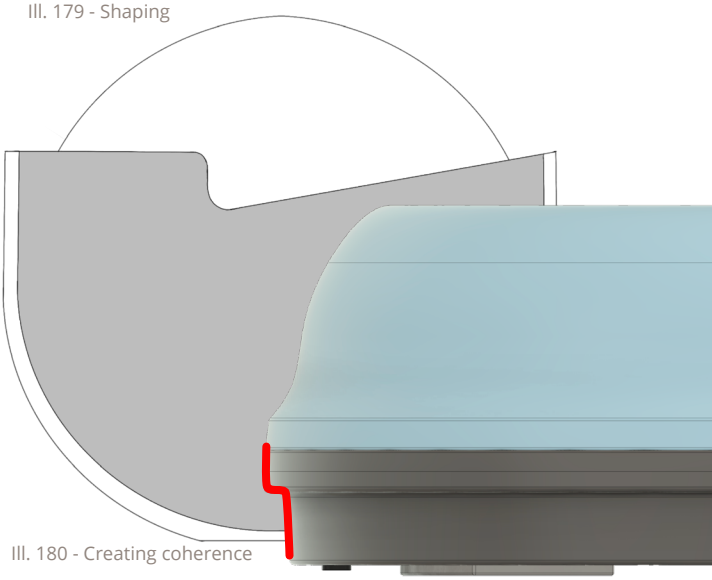

Ill. 180 - Creating coherence

SUM UP

The final shape was almost a copy-and-paste of the curves and top part from the Wobble Pad's bottom plate, with the other half opened up to make it more convenient for the user to grab onto it.

Securing Wobble Pad

From the interviews (App. 50) about the shape of the Wobble Dock, a user asked how the Wobble Pads would be mounted to prevent them from falling out when the dock was to be moved around. This was not something that had been considered but became an important feature to implement for refining the transportation aspect (Ill. 181).

A brainstorming session was initiated to establish different solutions for mounting the Wobble Pads.

The ideas that were drawn consisted of different methods for securing the wobble pad within the dock. Three methods stood out because they would be reasonably easy to implement in the dock. Ill. 182 shows three distinct methods that could solve the problem.

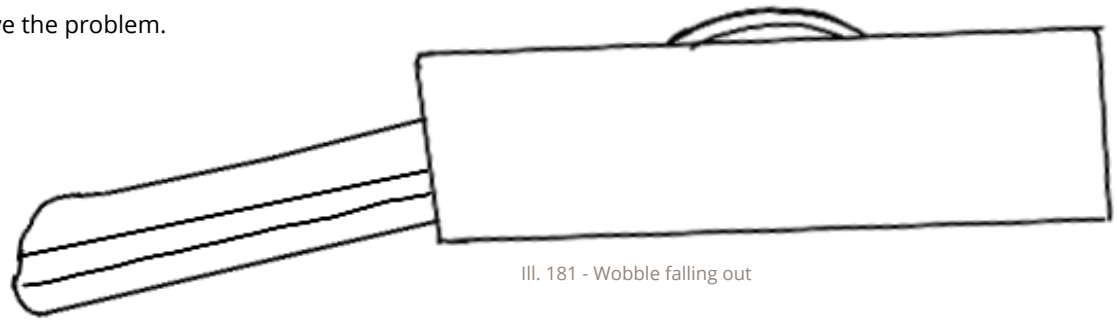

Ill. 181 - Wobble falling out

Ill. 182 - Concept for not falling out

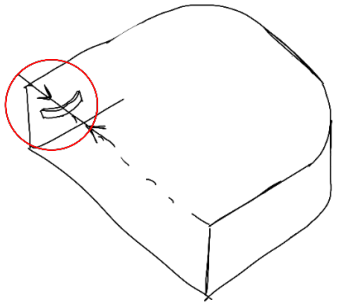

Leaf spring

Springs are a simple solution that provides much control over the load needed to keep the Wobble Pads in place.

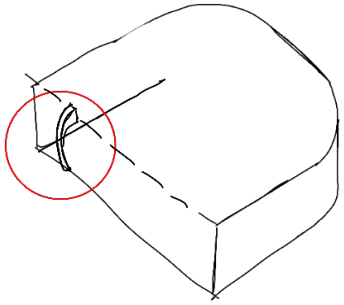

Arms

A set of arms to keep the Wobble pads secure for transportation.

This idea is modular, allowing for mounting when needed and dismounting when not.

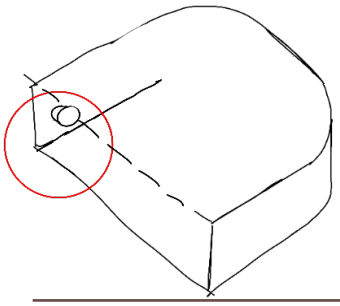

Magnets

A small magnet on each side.

When the Wobble Pad is slid into the slot, the magnets hook onto the outer shell and prevent it from falling.

The solution with leaf springs was chosen to secure the Wobble Pads. Mounting the leaf springs on the inner walls would be possible with small screws (Ill. 183).

Ill. 183 - Small Screws

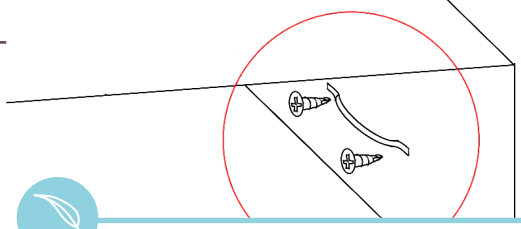

SUM UP

To ensure that the leaf springs would hold the Wobble Pads in place, their spring constant was calculated. However, to calculate the spring constant, an understanding of the situation and what will happen would be needed. In this case, the Wobble Pad would be put into its compartment, and its body would bend the springs inwards. This would hold it in place by utilising the springs' resistance.

To simplify the calculation avoiding calculations needed for curves, the spring has been viewed as a beam. The spring constant was calculated to 1,33 N/mm being the amount of force it would need to hold the Wobble Pad in place. To view the calculations, see (App. 51)

THE WOBBLE DOCK WILL FEATURE LEAF SPRINGS

Construction and Assembly

This section shows an overview of the construction, including which materials are used, how parts are put together, the weight and size of the product, and the wiring to make everything work. The goal of constructing the Wobble Dock is also to create strength while making it as light and cheap as possible for transportation and affordability purposes.

Shelves

To make the shelves lightweight and cost-efficient, IKEA products were examined because this is an identifying factor for their products. IKEA has a series of products called LACK (Inter IKEA Systems B.V., 2024), which consists of a structure called honeycomb paper (Ill. 184). The idea was to transfer this structure into the shelves of the Wobble Dock achieving low weight.

THE WOBBLE DOCK WILL FEATURE HONEYCOMB-PAPER-FILLED SHELVES



Ill. 184 - Honeycomb-paper-filled

Frame

The frame is built in layers like the shelves but without the honeycomb middle. It was important for the frame to create stability for the product. The picture below illustrates the layers (Ill. 185). In this case, the orange is Fiberboard, and the brown is MDF cutouts. Ill. 186 shows a side view without the outer layer. This construction ensures that the shelves are secured into the frame and, thereby, can transfer the load into the outer walls.

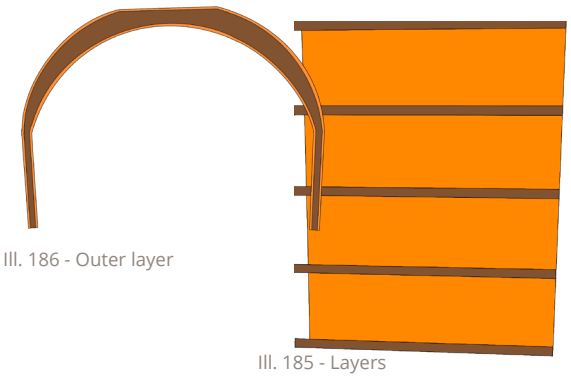

Ill. 186 - Outer layer

Ill. 185 - Layers

Assembly

The construction behind the shelf is like a sandwich, which is the same way that LACK (Ill. 187) is built up.

Trapped air with a frame to keep everything assembled. This method allowed for a lightweight construction (Ill. 188). The assembly process consists of glue and nails, which are covered with a layer of acrylic paint to give it its colour and finished with a layer of acrylic varnish to protect the surface.

For the frame, the idea for the construction is based on the same principles as the shelf. Lightweight construction with air pockets to reduce the amount of material used within.

This assembly process is similar to the shelf nails, screws, and glue, which are again covered with a layer of acrylic paint to give it its colour and finished with a layer of acrylic varnish to protect the surface. To simplify the transportation aspect two handles have also been screwed into the sides of the outer wall making it easier to carry around.

The construction is based on the IKEA LACK construction. With the right materials, it will become lightweight but strong enough to support the Wobble Pads.

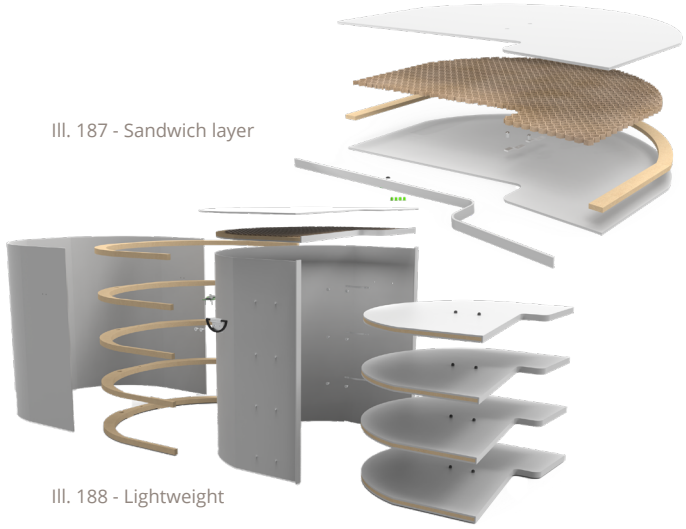

Ill. 187 - Sandwich layer

Ill. 188 - Lightweight

THE WOBBLE DOCK WILL FEATURE AN ACRYLIC PAINT FINISH

THE WOBBLE DOCK WILL FEATURE HANDLES

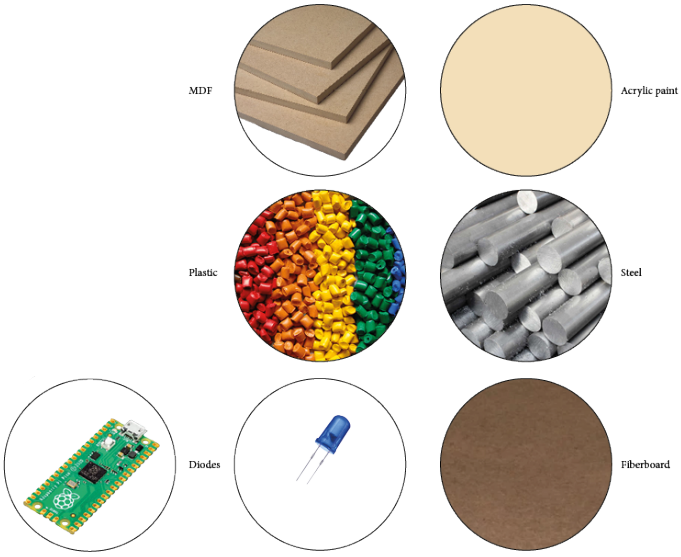

Ill. 189 - Materials

Materials

Overall, the Wobble Dock was designed with minimal materials, using only six different types (Ill. 189).

To see the amount used of the different materials, see App. 52.

Size of Wobble Dock

With its small size and lightweight, it has been made possible for both the children and the parents to move the product around, and it can easily be stored in a corner and be “out of sight” when guests are visiting (Ill. 190). To view more about the weight, see (App. 52).

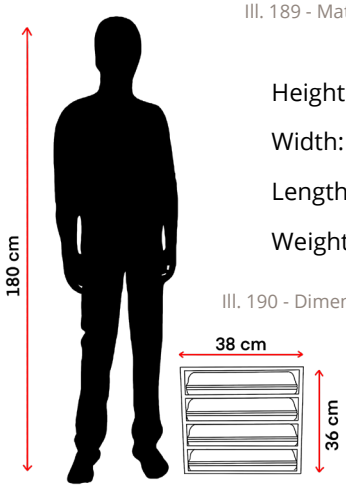

Height: 360 mm

Width: 385 mm

Length: 286,4 mm

Weight: 4,3 kg

Ill. 190 - Dimension

Wiring of Essentials

While figuring out everything needed in the Wobble Dock, it became clear that a Raspberry Pi was needed to connect to the Wobble Pads' network allowing Bluetooth pairing with the Wobble App.

This would be an alternative to adding a button to one of the Wobble Pads making it the "master" that would establish the connection to the other Wobble Pads. Adding the button would also change the appearance of this one Wobble Pad, making it different and recognisable from the others and sparking a risk of confusion.

A button was added to the top of the Wobble Dock to ensure that connecting the Wobble Pads to the Wobble App would be simple (Ill. 191).

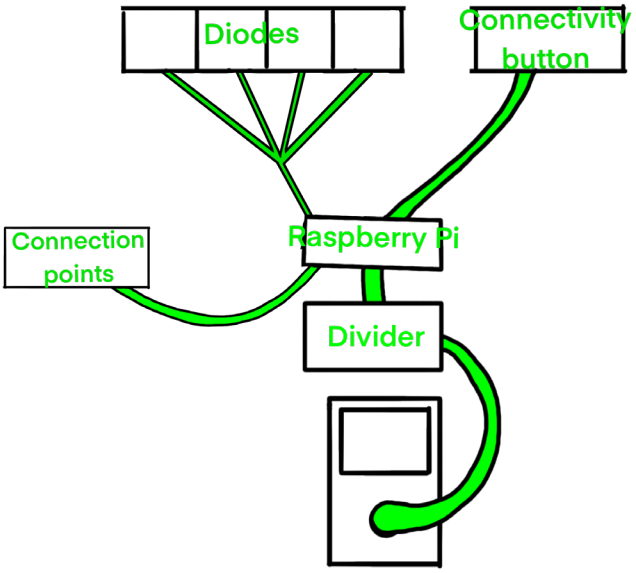

Ill. 191 - Connecting App and Pad

THE WOBBLE DOCK WILL FEATURE A RASPBERRY PI PICO W

THE WOBBLE DOCK WILL FEATURE A PAIRING BUTTON

Communication

It is crucial to simplify the feedback communication process between the product and the user.

In this case, diodes were an understandable way of visualising the charge of each Wobble Pad. Devices like speakers, headphones, and remote-controlled wheelchairs already use diodes to display the battery level. On Ill. 192 the different scenarios are shown. Red light means that the Wobble Pads are recharging and need to be left alone for a while longer, while green light means that they are fully charged and ready to go.

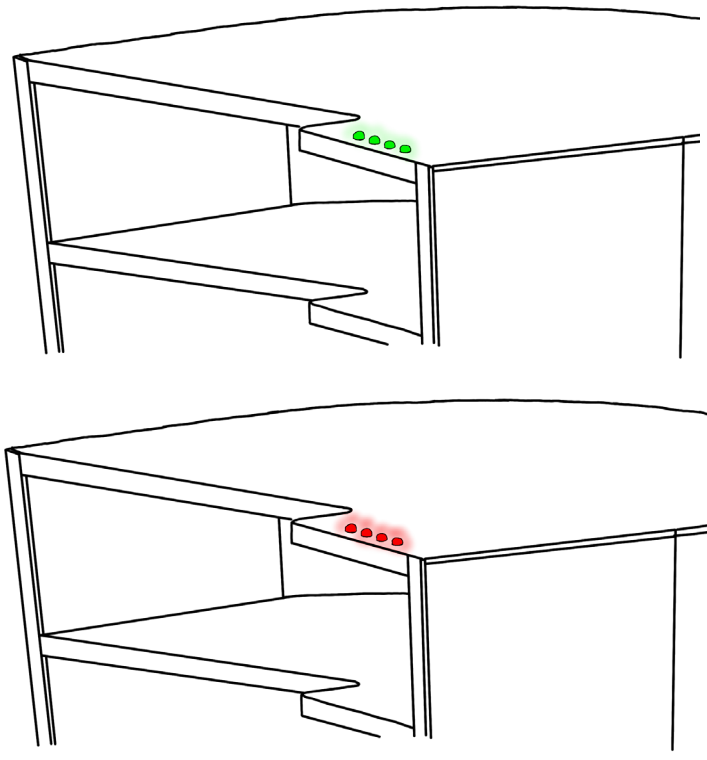

Ill. 192 - Battery Indicator Dock

THE WOBBLE DOCK WILL FEATURE BATTERY INDICATION DIODES

Through the process of finding materials, it was essential to make the shelf and the frame of the same materials, as this would save costs and speed up the manufacturing process. Furthermore, integrating a Raspberry Pi for Bluetooth pairing with the Wobble App avoids the addition of a physical button to designate a "master" pad to connect with the others. Simplifying user feedback was addressed through the use of diodes to indicate the charge status of each Wobble Pad

Sum Up

With the ability to recharge up to four Wobble Pads in two hours, the Wobble Dock seeks to offer a storage and charging solution for Wobble Pads. It is advised to use a 70W power source for effective charging.

Design iterations focused on usability, aesthetics, and user feedback, leading to a “Rounded” shape for easy access and placement. Key features include a Raspberry Pi for Bluetooth connectivity and diodes for charge status indication. The construction incorporates lightweight materials inspired by IKEA’s honeycomb-paper structure to balance strength and cost efficiency.

Wobble Dock Requirements

No.	Need	Imp.	Units	Reference
1	Fit within the living room	4	-	The Context, p. 25
2	Can contain and charge four Wobble Pads	5	Pcs.	Charging, p. 79
3	Can recharge Wobble Pads within two hours	3	Hours	Charging, p. 79
4	Visual indication of charging status	3		Shaping the Dock, p. 80
5	Can be transported	3	-	Shaping the Dock, p. 80

Ill. 193 - Phase 7

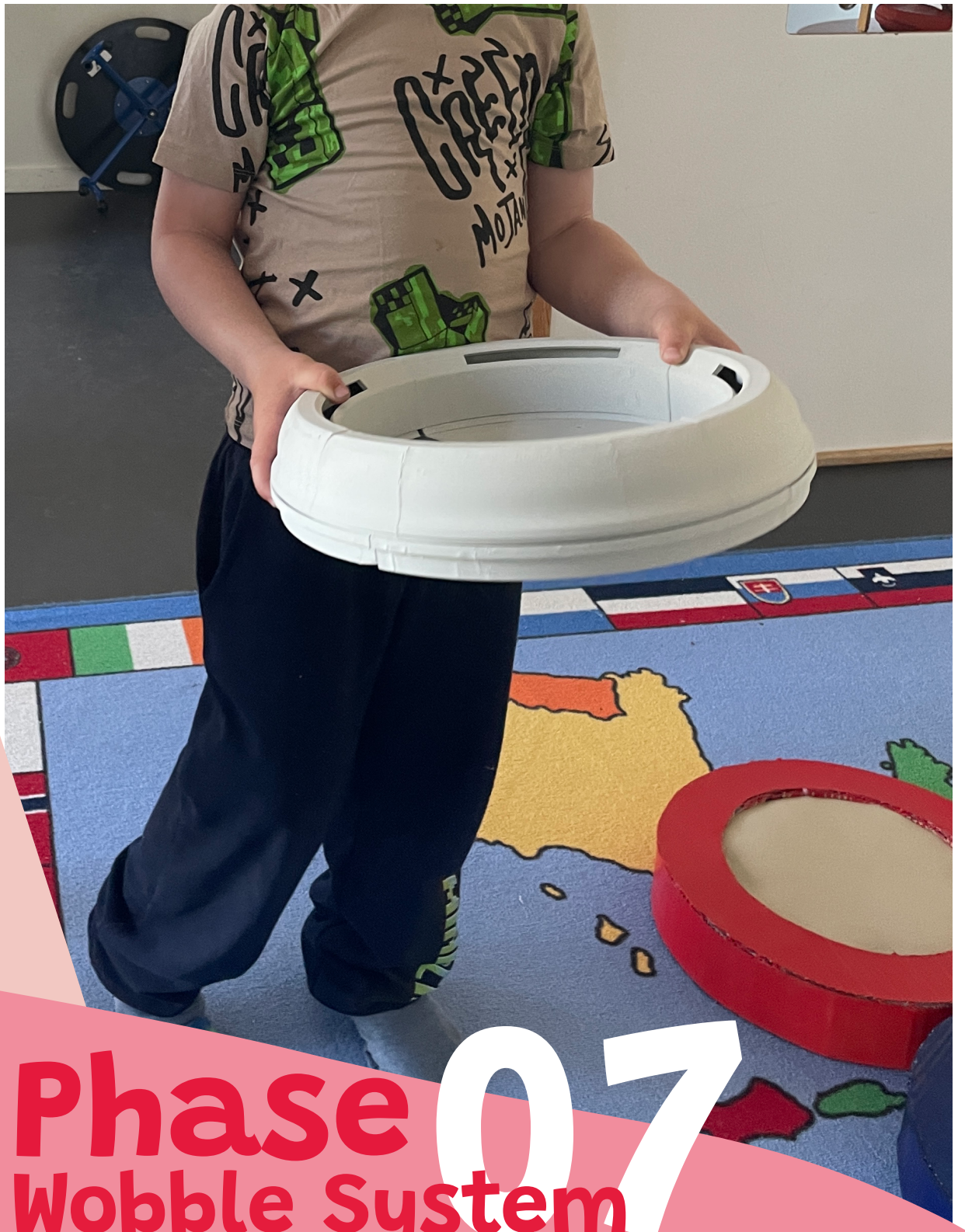

Phase 07
Wobble System

The seventh phase sums up development phases 4 - 6. This means the final interaction for the Wobble system will be presented, showing how the Wobble App, Wobble Pads, and Wobble Dock work together.

Combining the Parts

Now that the Wobble App, Wobble Pad, and Wobble Dock have been developed, it is time to combine them all, making the Wobble system (Ill. 194). The system presents new ways to train motor skills through gamification, where the Woble App represents a hub where the user can select their desired game. The games live through a combination of the Wobble App and the Wobble Pads as both software and hardware. This introduces new and almost endless ways to train motor skills.

The Wobble Dock represents the Wobble Pads' home, where they can be stored, transported, and charged. The Wobble Pads are fastened within the Wobble Dock's springs to keep them in place during charging or transport.

The following Block Diagram provides an overview of the Wobble System's interconnectedness (Ill. 195). It also showcases the internals of a Wobble Pad and the Wobble Dock, illustrating how the components will be wired.

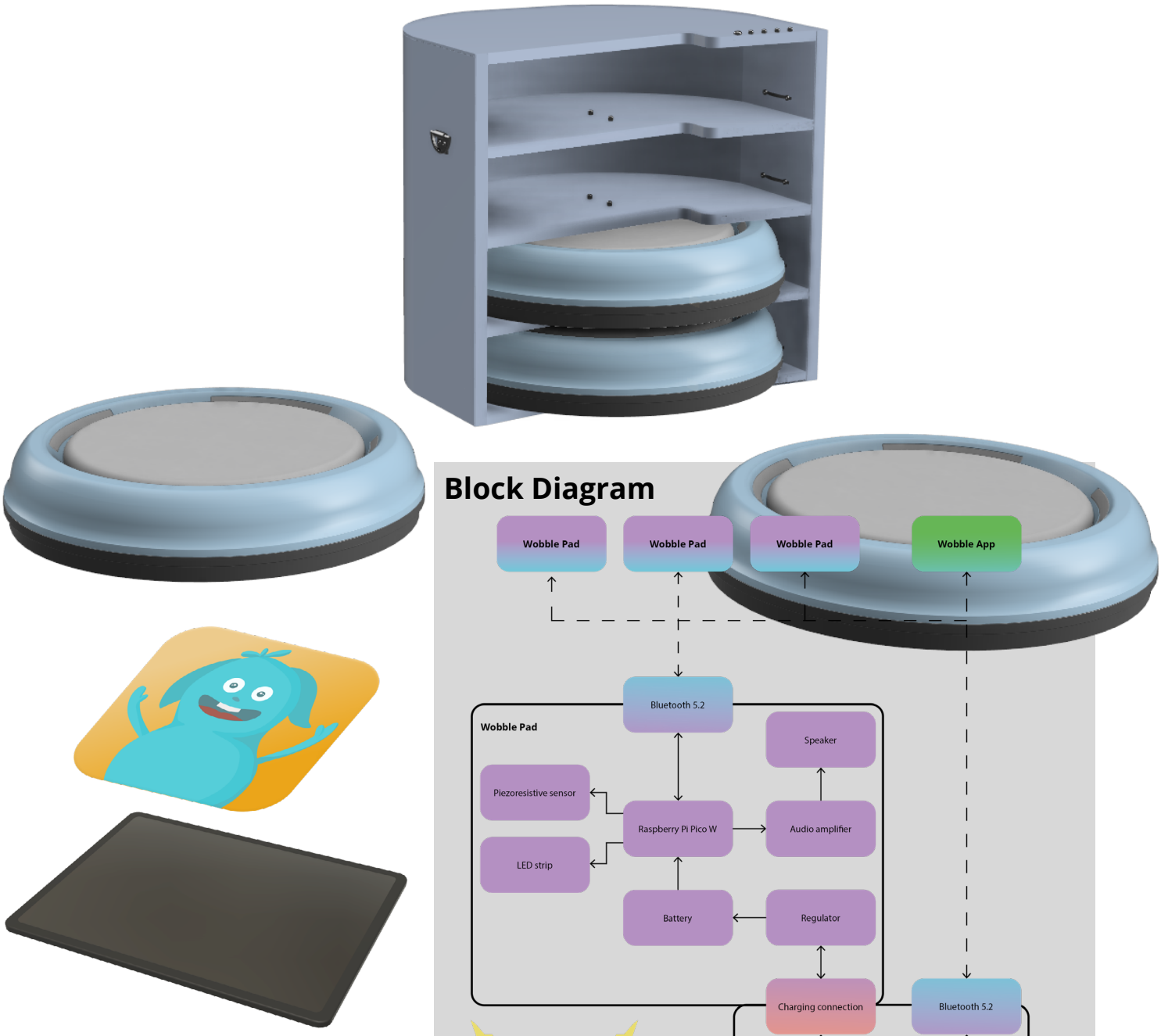

Ill. 194 - Wobble system

Ill. 195 - Block diagram

Interaction Flow

Pairing with the Wobble App

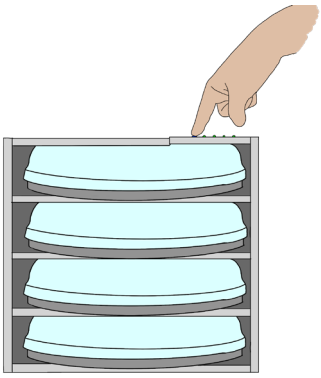

1. Push and hold the pairing button on the Wobble Dock with all Wobble Pads installed within.

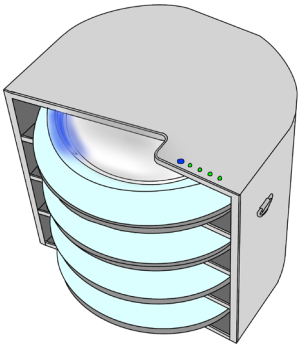

2. Release when all Wobble Pads illuminate with a blinking blue.

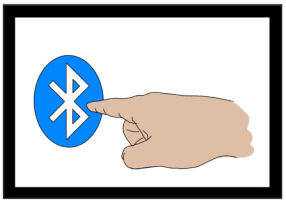

3. Install Bluetooth device on Tablet/device.

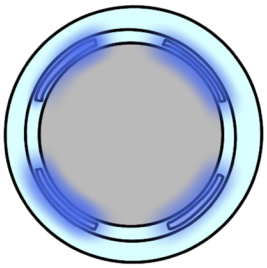

4. All Wobble Pads stop blinking and are now illuminated in a static blue indicating they are ready (the lights turn off after 10 seconds to conserve power).

Turning on the game

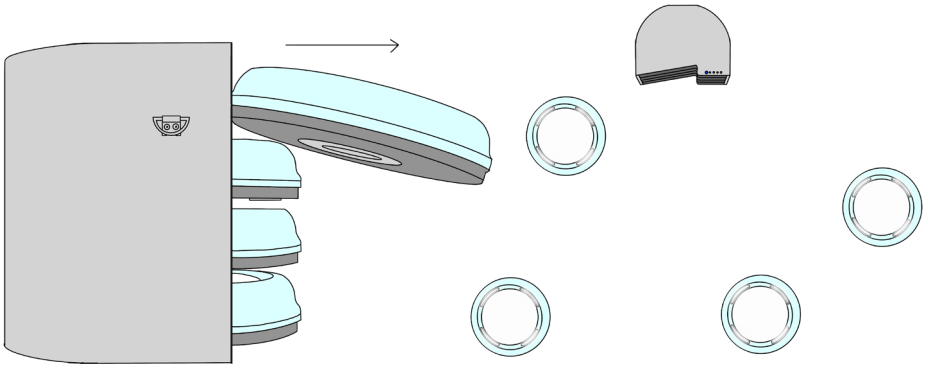

1. Take the Wobble Pads out individually (each states their battery status).

2. All illuminate in a static white indicating they are ready to set up for the game.

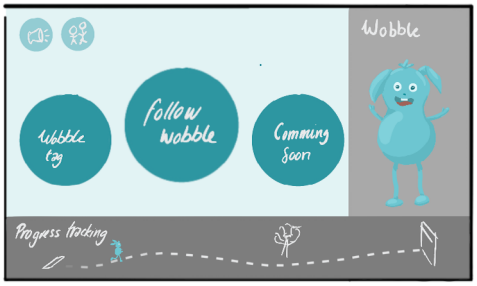

3. The Wobble App is opened, and the preferred game is selected.

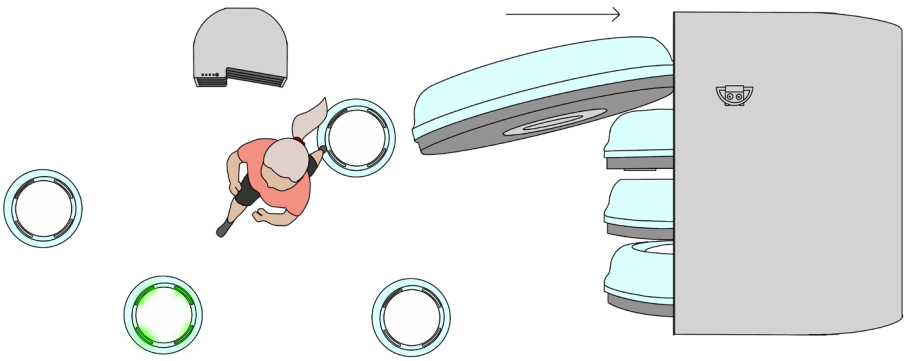

4. Start playing the game to your heart's content.

5. When finished playing with Wobble, return the pads to the dock.



6. Remember Wobble is easy to transport around, when going for a visit.

Ill. 196 - Interaction flow

Requirements and Specifications

With all the elements of the Wobble system product proposal now in place, the final requirements for the Wobble App, Wobble Pad, and Wobble Dock can be presented.

Wobble App

No.	Need	Imp.	Units	Reference
1	Activate cognitive thinking	5	-	How to Improve Motor Skills, p. 11
2	Rotate a minimum of 90 degrees in the: Lateral axis (Cartwheel) Anterior axis (Forward Roll) Posterior axis (Spinning)	5	Degrees	Concept Feedback, p. 35
3	Postural control stimulation minimum 15 minutes a day (5 min. x3)	4	Min.	Postural Control, p. 24
4	Provide solo and multiplayer play	5	-	Observations from Blåkildevej Kindergarten, p. 22
5	Compatibility with difficulty scaling	4	-	Observations from Blåkildevej Kindergarten, p. 22
6	Promote play rather than work	5	-	Theory of Play, p. 13
7	Provide a motivational digital helper	4	-	Interactive Play Design, p. 52
8	Provide acknowledgement for overcoming challenges	4	-	The Ideal Play Situation for a Rehabilitation Game, p. 23
9	Include grown-up section	4	-	Grown-up Only Section, p. 51
10	Game explanation through known thermology to children	5	-	Interaction with the Tablet, p. 53

Wobble Pad

No.	Need	Imp.	Units	Reference
1	Include an active physical product	5	-	Use of Digital Media for Training Gross Motor Skills, p. 17
2	Contain a dynamic surface	3	Degrees	Testing out Equipment, p. 28
3	Active digital media consumption	4	Min.	Use of Digital Media for Training Gross Motor Skills, p. 17
4	Oral and visual feedforward and feedback	3	-	Challenging the Play Twister Concept, p. 38
5	Avoid damage to furniture and interior decorations	3	-	The Context, p. 25
6	Can freely be moved to different locations during play	3	-	The Playground, p. 23
7	Set up and clean up time: 5-10 minutes	3	Min.	The Context, p. 25
8	Main setup on the floor	3	-	Concept Feedback, p. 35
9	Minimum diameter of dynamic surface, Ø = 25 cm	4	cm	Size Testing of Dynamic Surface, p. 62
10	Maximum height of, H = 7 cm	4	cm	Size Testing of Dynamic Surface, p. 62
11	Maximum weight of 3 kg	5	kg	Weight, p. 62
12	Data transfer rate of at least 1,41 Mbps	4	Mbps	Creating a Network, p. 68
13	Wobble Pad battery life of 2 hours.	4	Hours	Power Source, p. 71
14	Can withstand 1200 N of force	4	N	Material Considerations and Durability, p. 74

Wobble Dock

No.	Need	Imp.	Units	Reference
1	Fit within the living room	4	-	The Context, p. 25
2	Can contain and charge four Wobble Pads	5	Pcs.	Charging, p. 79
3	Can recharge Wobble Pads within two hours	3	Hours	Charging, p. 79
4	Visual indication of charging status	3		Shaping the Dock, p. 80
5	Can be transported	3	-	Shaping the Dock, p. 80

Ill. 197 - Phase 8



Phase 08
Market Implementation

The eighth phase introduces a business plan for implementing the Wobble System into the market. This includes pricing the Wobble system and an overview of critical aspects essential to implementation via the Business Model Canvas. Furthermore, future scaling opportunities will be considered within the roadmap.

First-year plan

The Wobble's success relies heavily on how the first-year plan is executed. The first focus should be fostering relations with physiotherapist clinics across Denmark to ensure the product has a reliable sales channel before launch. This could be accomplished through conferences on physiotherapy products.

While sales channels are ensured, a working app prototype should be developed. This part of the product will be outsourced to a new stakeholder: StoryToys (StoryToys, 2024). StoryToys will be responsible for the app's prototyping, development, and maintenance and will be a longtime business partner. They can create a working prototype that can be used for beta-testing by other stakeholders like Sofiendals Sundhedsteam (Sofiendal Sundhedsteam, 2024), allowing users to test an utterly functional software prototype.

Following the development of the BETA software, an MVP should be developed to ensure additional long-term user testing and QA testing. This will limit the risk of unforeseen problems before the product's final launch.

By bringing in business partners like Sofiendals Sundhedsteam (Sofiendal Sundhedsteam, 2024) and Klinik Syn og Indlæring (Klinik Syn og Indlæring, 2024), the first sales channels for the business case have already been established, creating an edge for the product. The idea would be to promote Wobble at a therapy conference to attract investors and encourage more clinics to become business partners. The co-development of Wobble with acknowledged physiotherapist clinics for children gives the product credibility.

It could be ideal to partner with toy stores like BR to expand the sales channels to promote the product as a toy that trains gross motor skills. This would allow Wobble to have both a B2B and B2C business model, which will be further demonstrated in the execution plan.

Execution Plan (5 years)

Wobble's main aim for the execution plan focuses on expanding and scaling the number of games available to the customer, while also exploring the possibility of extending the existing target group by providing games for different age groups. This will prolong the product's longevity by ensuring that children can use the product for a longer time without losing interest or outgrowing the product. This will create more customer value by offering a product that can develop and grow with the children. Prolonging the life span can increase revenue from individual customers by providing additional sales.

In addition to expanding the game range, the focus will simultaneously be securing funding for the project, launching the product, and promoting it.

Year 1	Year 2	Year 3	Year 4	Year 4
App development	Create more games	Expanding target group	Create more games	App development
Long-time partnerships	Expanding partnerships	Physiotherapist clinics	Product promotion	Testing
Testing	Product promotion	Product promotion	Expanding target group	

Ill. 198 - Exection plan

Business Model Canvas

Wobble's business models provide value by offering products, services, and subscriptions to create a complete customer experience. Understanding the business model category that Wobble follows allows for a better understanding of navigating the start-up process, allowing for a smoother and more efficient strategy to grow the business in the long run and facilitate an optimised presentation method to communicate the business strategy to potential investors (Ill. 199).

<table>
<tr>
<th>KEY PARTNERSHIPS</th>
<th>KEY ACTIVITIES</th>
<th>VALUE PROPOSITION</th>
<th>CUSTOMER RELATIONSHIP</th>
<th>CUSTOMER SEGMENT</th>
</tr>
<tr>
<td rowspan="2">Manufacturing partners

StoryToys

Sofiendals Sundhedsteam

Danske Fysioterapeuter

Investors

Customers</td>
<td>Research and development

Assembly

Out-sourcing

Evolve the method of physiotherapy</td>
<td rowspan="2">Children:
- Making physiotherapy fun
Solo play and multi-player game
- Training of postural control
- Active indoor activity
- Motivation
- Level processing
- Self-esteem

Parents:
- Less conflict when training physiotherapy
- Allows for down time
- Can participate
- Easy to put away</td>
<td>Creating a fun alternative, which they can use for variants of play

Co-creation ensuring that the product lives up to physiotherapy standards</td>
<td rowspan="2">The Mass Market:
Children toys

Primary Customer:
Parents with children who suffer from poor postural control

Secondary Customer:
Parents who need to activate the children with indoor play

Tertiary Clinics:
Buys product to sell to their customer to suggest a better or more fun way to train postural control.</td>
</tr>
<tr>
<td>KEY RESSOURCES

Physical:
- Moulds, materials, components, equipment
Human:
Designers, quality control, Sale
Intellectual:
CE- certified
The Toy Safety Directive 2009/48/EC
Financial:
Loan, grants, investors</td>
<td>CHANNELS

- Recommendations through clinic and other with knowledge of postural control training
- Web sales
- Toy stores</td>
</tr>
<tr>
<th colspan="2">COST STRUCTURE</th>
<th colspan="3">REVENUE STREAM</th>
</tr>
<tr>
<td colspan="2">Fixed:
Salaries
Development
Machines

Variable:
Components
Materials
Manufacturing
Shipping</td>
<td colspan="3">Asset sales (Fixed price):
- The wobble Platform
- Purchase of individual games

Subscription:
- Monthly payment (access to all games)</td>
</tr>
</table>

Ill. 199 - Business model

Market Scope and Landscape

A deep dive into the market is made to estimate Wobble's potential market and realistic market share. This will provide a baseline for assessing the production size needed for a product launch. Market position and competitors were explored to understand the cost and value to ensure that the product is sold at a fair market value.

Main competitors

Other exergames like JustDace, HoloFit, and Wii Fitness are the leading competitors. Most exergames are not for home use but can often be found in parks, libraries, fitness centres, and other areas that are open to the public. That is because most exergame platforms cost around 27.500 DKK and are not portable. This price range is not affordable for the average family. Exergames around people's homes use Wii Switch, PS5, and VR platforms.

Platform	Price	Game	Price	Total
Nintendo Switch	2.699 DKK	Ring Fit Adventure	599 DKK	3.298 DKK
PlayStation	3.709 DKK	Just Dance 2024	249 DKK	3.958 DKK
Meta Quest 3 VR	4399 DKK	HOLOFIT (Subscription)	84 DKK a month 580 DKK a year	For a year: 4.979 DKK

The setup of Wobble follows the design of bigger exergames used in public areas. In that sense, the screen is not the main focus but functions more as an assistant. Wobble is also more portable than the exergames mentioned above.

	TWall		
Game	TWall 16	TWall 32	TWall 64
Price	44.690 DKK	82.535 DKK	120.379 DKK

	Beam & Obie	
Game	FX Game Zone	Lucynt Interactive
Price	37.779 DKK	37.779 DKK

Wobble functions more like a hybrid of the options above. Considering this, the price of the Wobble platform should be placed above the other game platforms but still within the price range that the customers are willing to pay, around 5.499 DKK. Like HoloFit, Wobble also has another source of income through either subscriptions or purchases of individual games, which gives Wobble a more ideal price based on the other game consoles.

Customer and launch size

Wobble is an indoor game platform whose primary focus is training children who suffer from DMCD or problems related to impaired gross motor skills. This makes parents of children with gross motor skills problems the leading customer target group. However, Wobble is also available for parents with children who do not suffer from DMCD problems and want to introduce an active indoor fun game that trains gross motor skills simultaneously. Considering this Wobble is both:

- Physiotherapy that functions as a game
- A game that offers physiotherapy

Depending on what customer segment the marketing is targeting.
In Table 03 statistics on children in the age group 5-7 years in Denmark is illustrated (Danmarks Statistik, 2024):

Age	Population total	Children without problems	Motor skill problems (29%)	Hereof DMCD (6%)
5 years	62.486	44.365	18.121	3.760
6 years	63.366	44.990	18.376	3.809
7 years	63.670	45.206	18.464	3.820
Total	189.522	134.561	54.961	11.389

Market share	5,1%	1%	15%	40%
Total	9.590	1.346	8.244	4.556

Table 03 - Market share and customer segment

The estimated market share is based on the notion that people, especially parents, according to the interview conducted with Gitte (App. 17), tend to buy solutions to their problems that have the outcome that they desire (Wolfe, 2018). This phenomenon is especially present in physiotherapy, where solutions that can reduce the conflicts taking place at home doing training is especially desirable for the parents. If the market is scaled to the European Union, considering the perks of free trade agreement, for the age group 5-7 years:

Age	Population total	Children without problems	Motor skill problems (29%)	Hereof DMCD (6%)
Total	11.976.974	8.503.652	3.473.323	718.618

Market share	5,1%	1%	15%	40%
Total	606.035	85.037	520.998	287.447

SUM UP

It is esteemed that between 6-10% of children in all age groups suffer from motor skill disabilities or more severe DMCD. This percentage has been consistent for an extended period and will likely not change. This means that Wobble will constantly have a steady customer stream that will secure revenue income if Wobble keeps up with the latest technologies and developments, which is why the first product launch will focus primarily on targeting customers with children who suffer from DMCD.

Realisation Budget

The realisation budget (Ill. 200 & Table 04) is based on the sales estimates from the previous section and will slowly target the estimated numbers and different countries.

As described in the execution plan, the first year will primarily be used to further develop the product, which will not result in any turnover for the first year of the business. That is why securing funding for the product is essential. Investments in further prototyping and testing (500.000 DKK), tooling in the form of moulds (240.000 DKK), and app development (1.000.000) will be made in the first year.

The second year of business life's main focus is sales and will primarily focus on and target the 11.389 children in Denmark with DMCD. It is estimated that around 40% of the children have parents willing to spend money on a product that could solve their problem. The estimate is based on the response from the parents at LEO's Legeland and Gitte. This leaves the opportunity to sell the product to 4.556 children (Table. 03). An estimated 1.139 Wobbles Systems needs to be sold to break even, which will be the main goal of the second year.

All numbers can be seen in attached Excel Sheet.

Variable Cost

Product costing (see specification in xxx)	
Material costs, 4 Wobble pads	2.100
Material costs, shelves and docking station	659
Various transportation costs	100
Production time - 1 hour of 260 DKK/hour	260
Assembly time - 20 minutes of 260 DKK/hour	87
Packaging incl. labor costs	30
Overheads (warehouse, energy, distribution, and administration etc) 20%	647
Total estimated costs per Wobble sold	**3.883**

Fixed Cost (tDKK)

Development costs - Tooling	240
Development costs - Prototype	500
Development costs - App	1.000
Marketing	200
Salaries (three employees)	-
Administration (patents, office costs, rental costs etc.)	100
Total estimate	**2.040**

Table 04 - Variable cost and Fixed Cost

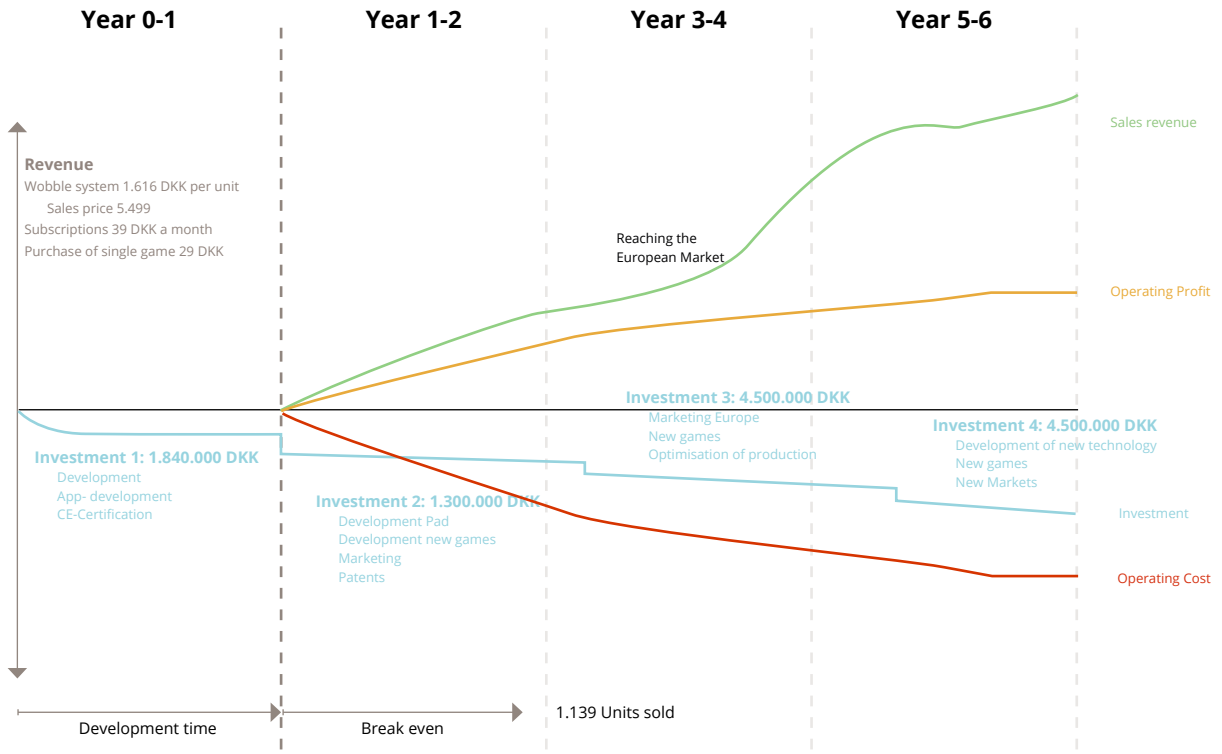

	Year 1-2 Sold 1.263 Units - moulds + game	**Year 3-4** Sold 5.697 Units - moulds + game	**Year 5-6** Sold 6.393 Units - moulds + game	**Summary**
Baseline	Revenue: 7.097.000 DKK Operating cost: 4.904.000 DKK Operating profit: 2.139.000 DKK	Revenue: 53.756.000 DKK Operating cost: 36.734.000 DKK Operating profit: 17.022.00 DKK	Revenue: 73.297.000 DKK Operating cost: 49.653.000 DKK Operating profit: 23.644.000 DKK	Revenue: 134.150.000 DKK Operation cost: 91.291.000 DKK Operation cost: 27.485.200 DKK

Ill. 200 - Realisation Budget

Scaling Opportunities

When considering the scaling opportunities for Wobble it is important to understand what the customer is getting when purchasing the current product, which includes the Wobble Pad, Dock and App, which consists of the selection of three games for free the rest either has to be purchased separately or unlocked through subscription.

Wobble includes digital media, which has endless opportunities when it comes to the development of new games. To expand the longevity of the product and the time that the product spends with the user it would be ideal to widen the age range of the current customer segment by both catering to young and older children this could be done by developing games specially for these age groups, which will prolong the time of subscriptions and additionals sales in games. This approach will however not necessarily result in additional sales of the wobble system.

Therefore another approach to scaling the business could be the beachhead approach (Meyer, 1997), which is considered a low-cost way of scaling the business by fitting the current product into new market and customer segments. The concept is to make segmental changes to the original product for example creating new software suitable for a new segment like professional physiotherapy clinics. When established in the different markets the next step could be to scale up and/or down to make the product available for more users (Ill. 201).

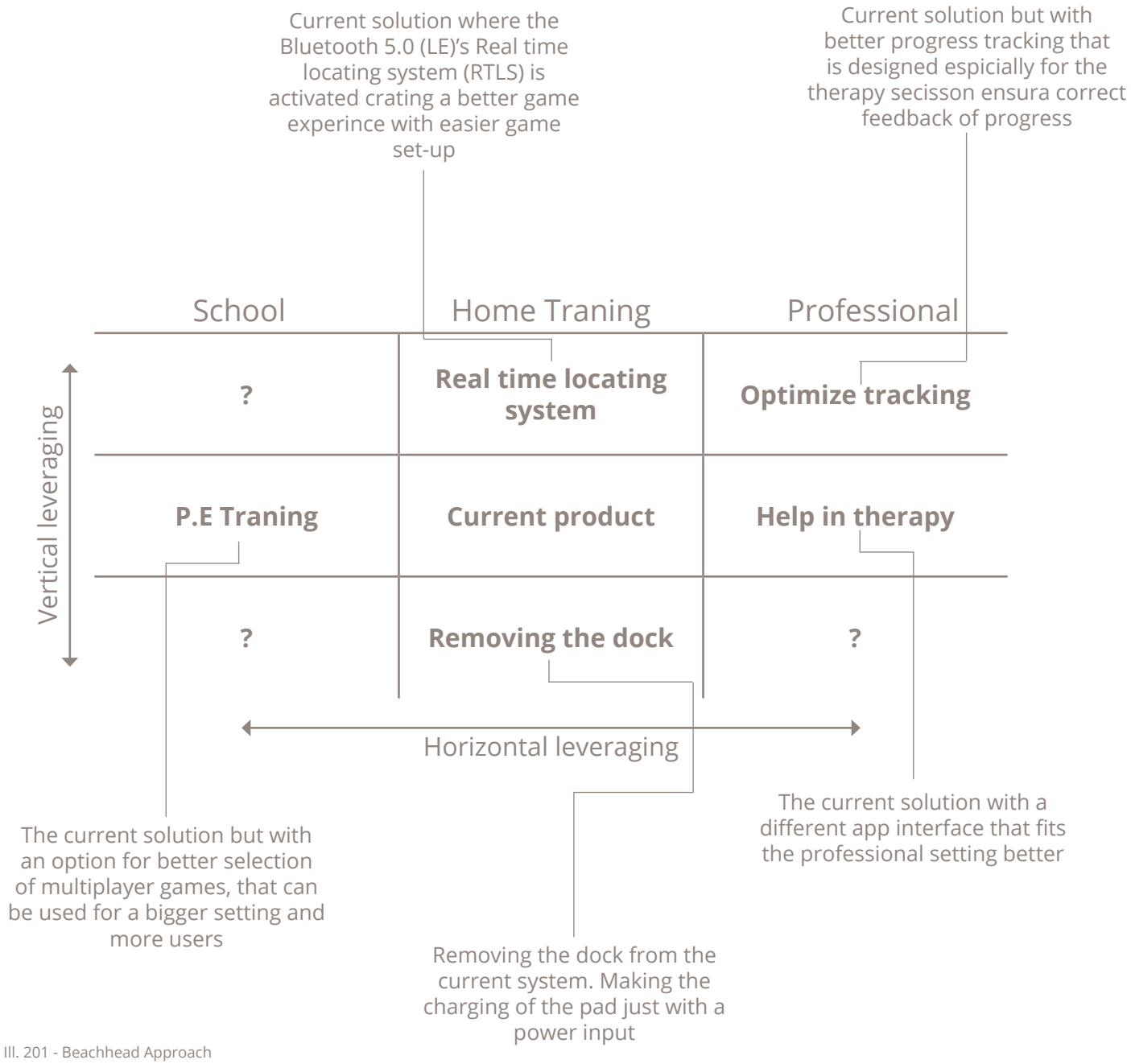

Ill. 201 - Beachhead Approach

Triple Bottom Line

The triple bottom line provides general guidelines and goals for companies, stating that they should not only focus on profit but also commit to corporate social responsibility and environmental impact. (Kenton, et al., 2023)

Planet

When designing Wobble several decisions were based on the commitment to ensure, that Wobble left as little impact on the environment as possible. The design of the Wobble Pad is based on the legislation "Right to Repair", which ensures that the original equipment manufacturer offers to get products covered by "Repairability Requirements Ecodesign" repaired even after the legal guarantee is up. This is to promote the longevity of products by providing a more cost-effective alternative than replacing the products with new ones (European Commission, 2023). Wobble does not currently fit under any of the product categories of Ecodesign (smartphones and tablets, washing machines, dryers, dishwashers, fridges, displays, welding equipment, servers and soon vacuum cleaners) (EEB, 2024). The European Union is slowly adding more and more products to the Ecodesign list, which is why Wobble is designed with repairability in mind as seen by the easy access to the electronic components. The foam pillow is one weak link identified in the Wobble components at risk of having a shorter lifespan than other components. To ensure that the pillow is easily replaceable if a new one is needed the component has been designed, so that it is attachable with magnets, which provide easy repairability by the customers themselves without requiring assistance from professionals. The form pillow should be available for the customer as a spare part.

Considering the end of Wobble's lifespan and the circular economy of the product several steps have been taken into consideration during the design phase to ensure sustainability. There are however some pitfalls in the design, the main material being a combination of two types of plastics. Glue has been used to attach some components like the neoprene for slip prevention, and the aluminium for the charging rings and battery, which does not make the recycling process ideal for the customer.

Profit

The start-up's vision is to "Improve the quality of life for children that suffer from DMCD by creating awareness in the communities." This goal helps promote the product and ensures that the diagnosis is taken more seriously in Denmark. This could be done through investing in partnerships and research that could help improve Wobble.

Wobble is committed to use suppliers within the European Union, which helps foster economic wealth in the local communities where the factories are placed. Wobble is focusing on becoming available in Denmark and the rest of the European Union. Keeping the supply chain local has limited the risk of problems occurring in supply.

People

Introducing a product like Wobble to the market can positively impact communities and families. The people who are the most positively affected by the introduction of Wobble are the customers with children who suffer from DMCD. By providing and introducing a physiotherapy product that trains the children in the safe space of their homes and creates a positive association with the training, it is more likely that the children will complete their training exercises. If the children can improve their symptoms from DMCD their chance of becoming a well-integrated member of society will increase. It will also increase their quality of life by minimising their chance of being victims of bullying and decreasing the prospect of them becoming morbidly obese, which can come with a lot of complications. These complications load the capabilities of the healthcare system and, in doing so, the community model.

Ill. 202 - Phase 9



Phase 09
Epilogue

This phase is the process report's conclusion. It summarises the project's most important findings, followed by a reflection on the process and product proposal of Wobble as a whole.

Conclusion

This project has aimed to find a suitable way to help children in the age group 5-7 with motor skills issues by providing them with fun and motivating ways to improve their skills. This has led to extensive research on motor skills and play behaviour, showing that the primary senses, including the vestibular system and postural control, are the base of motor skills problems.

After the theoretical approach, further investigations also showed a paradox revolving around the lack of consistency in motor skills training provided by physiotherapists. This would counteract the purpose of the provided training, as only consistency would help show the desired results. In this connection, the focus was narrowed even further to a B2C context with a training toy for the home, introducing the children's parents as stakeholders in that connection.

With the mapping of the problem space in order, the following product development would lead to the introduction of Wobble. Wobble is an active and digital exergame product, that introduces gamification and reward systems with a focus on postural control stimulation. Wobble introduces a scalable game experience through three distinct elements:

- A Wobble App functioning as a hub and user interface for games and progression,
- Wobble Pads functioning as physical training pads used for game input.
- A Wobble Dock functioning as the Wobble Pads' home, charging, and transportation solution.

Due to the realisation that Wobble would compete in a market of training toys, it would be part of a red ocean market, posing a considerable risk. Therefore, it was decided that Wobble should be marketed as an exergame for the home to compete in a blue ocean market where approval from physiotherapists would promote the product. In turn, this would introduce more extensive opportunities for expanded sales channels.

With the introduction of the Wobble system, children would have the opportunity to train their postural control in the comfort of their homes with a motivational progression system. The motivational progression system ensures minimal input requirements from their parents. This challenges the children by putting them in charge and making them want to improve.

Reflection

Product

Product System

While working on the project, it became clear that Wobble needed more than just a Wobble Pad to function as intended, introducing both the Wobble App and Wobble Dock. Accepting this brought the project into a product system rather than a single product.

Looking back, the project might have benefited from limiting product development to one product rather than three to create a greater focus on the main product, the Wobble Pad. However, it was realised that the involvement of the Wobble App and Wobble Dock was necessary to accommodate the requirements which is why the choice was made. This transferred many resources into detailing and developing the Wobble Dock and App, initially considered extras. Resultingly, fewer mock-ups, prototypes, and tests would be made lowering the overall detail level for the product proposal.

While having to rush to get everything done in time it did however provide an opportunity to work with product identity, matching shapes and characteristics between products and developing an extensive game and training experience.

Working with App Development

The Wobble App development took a lot of time. It was a new way to view design, which meant that many resources were put into its development. This element was a secondary priority that was mostly investigated to create the game experience and introduce a guide for the children. In this case, it could have been better to communicate only the important parts and leave the detailing to professionals for better resource utilisation.

A crucial part of the Wobble App development is price. In this case, no price was found for its development and maintenance. This would be an extra expense that would be added to the already high product cost.

Cost and Overcomplication

When designing the three products, the rushed design resulted in not thinking everything through in the Wobble Dock, specifically the manufacturing and assembly.

A crucial aspect of the product is the number of parts that went into it. This could have been handled more skillfully, leading to a solution that might have involved fewer distinct components.

Another aspect is the limited accessibility to electrical components in the Wobble Dock, which could become a problem in case of component failure. Currently, the only way to access these components is by removing the shell, which is hard to do without damaging it. This could result in repairs becoming unnecessarily costly, as the shell would also need replacing.

Scalability Opportunities

The whole concept of Wobble was to create a product for the home but multiple opportunities could have been explored to scale it for other contexts.

One of these opportunities was bringing the product outside to gardens or similar places. This could give users new opportunities to change the environment and keep the game new and exciting every time it is used. This context expansion would extend the product proposal's usability creating an advantage and adding an additional key selling point to benefit from.

Another scaling opportunity that was considered was implementing Wobble into institutions and physiotherapist clinics. This would make more people aware of the product because of possible extended exposure to it. This relies on situations where children would have had fun playing with Wobble in kindergarten or at the clinics, making it more recognisable and relatable, opting for parents to buy it for home use as well.

A third scaling opportunity for Wobble is to make games for different age groups. Due to the nature of the product containing all the necessary components for software expandability and the ability to support more than 120kg, it would be possible to introduce games aimed at both older and younger ages than the current age group of 5-7-year-old children. This would also promote product longevity as it would grow with the user from for example the age of 3 to 10 years old. Introducing this aspect of product longevity also promotes sustainability as an extended product lifetime can mitigate some of the less sustainable development choices like that of glueing some of the components and using a hard-to-recycle plastic blend of PC/ABS for the Wobble Pads' shell structure.

All of these scalability options would help increase awareness of the product's presence, which would promote it and likely lead to more sales.

Process

Working with a Wicked Problem

One critical aspect of choosing the subject for this project was based on the opportunity to work with a wicked problem, which would introduce an extended challenge. This approach meant conducting extensive research and using large amounts of time just to narrow down the problem space making it tangible. This often meant more time was spent in the problem space trying to understand it by investigating and researching rather than challenging it by co-evolving and utilising the solution space as an upper hand. This was sometimes a counterintuitive approach as sketching ideas, making mock-ups etc. could have been the helping hand that was needed to spark new ideas and resultingly help understand the problem better.

The Users and Working B2C

A critical aspect that would complicate the development of the product proposal was the nature of the chosen B2C direction. This introduced a user group consisting of children and their parents within the context of their homes, which would turn out to be an almost impossible place to reach without knowing someone who would fit the description for the project. While fortunate to know one family it was still a minimal representation of the user group which led to a search for alternate solutions including facilities like LEO's Legeland and the kindergarten, Blåkildevej. Even though it was possible to interview random parents and get feedback on ideas in LEO's Legeland it was not possible to test mock-ups and games at this location. Oppositely at the kindergarten, this was possible but it was tough to get constructive feedback due to the children only being able to express whether the test was fun or not. While occasionally being enough to make decisions it was not always seen as sufficient to make well-thought-out decisions for the product proposal that would have to work in the home.

References

A

AudioMountain, 2024. Audio File Size Calculations. [Online]
Available at: https://www.audiomountain.com/tech/audio-file-size.html
[Accessed 15 5 2024].

AXTION TECHNOLOGY, 2024. Beam & Obie Interactive Projection Game System. [Online]
Available at: https://axtiontech.com/pages/projection-game-special
[Accessed 21 5 2024].

B

Bluetooth SIG, Inc., 2024. Bluetooth Technology Overview. [Online]
Available at: https://www.bluetooth.com/learn-about-bluetooth/tech-overview/
[Accessed 15 5 2024].

bObles, 2024. Tumledyr. [Online]
Available at: https://bobles.dk/
[Accessed 21 5 2024].

Børnehuset Blåkildevej, 2024. Børnehuset Blåkildevej. [Online]
Available at: https://boernehavenblaakildevej.aula.dk/
[Accessed 2 4 2024].

C

Cleveland Clinic, 2022. Dyspraxia. [Online]
Available at: https://my.clevelandclinic.org/health/diseases/23963-dyspraxia-developmental-coordination-disorder-dcd
[Accessed 4 3 2024].

D

Danmarks Naturfredningsforening, 2024. Slip børnene fri i naturen. [Online]
Available at: https://www.dn.dk/born/viden-om-born-og-naturen/
[Accessed 5 4 2024].

Danmarks Statistik, 2024. Folketal den 1. i kvartalet efter civilstand, køn, område, tid og alder. [Online]
Available at: https://www.statistikbanken.dk/statbank5a/default.asp?w=2752
[Accessed 19 5 2024].

Design Psychology, 2024. Double Diamond. [Online]
Available at: https://www.designpsykologi.dk/hvad-er-double-diamond
[Accessed 21 5 2024].

DR, 2024. Tema: Dansemix. [Online]
Available at: https://www.dr.dk/spire/kultur-aestetik-og-faellesskab/tema/dansemix
[Accessed 14 5 2024].

Duncan, A., 2023. Playing Alone Is Important for Kids—Here's Why. [Online]
Available at: https://www.parents.com/playing-alone-8413896
[Accessed 3 4 2024].

E

EEB, 2024. New EU law sets to make repair more affordable for selected products, campaigners push for widespread right to repair. [Online]
Available at: https://eeb.org/new-eu-law-sets-to-make-repair-more-affordable-for-selected-products-campaigners-push-for-widespread-right-to-repair/
[Accessed 16 5 2024].

Elgiganten A/S, 2024. Just Dance 2024 Edition (PS5). [Online]
Available at: https://www.googleadservices.com/pagead/aclk?sa=L&ai=DChcSEwjtoPGQ2ZmGAxURGq
IDHfM1CpIYABAEGgJsZQ&ase=2&gclid=Cj0KCQjwxqa
yBhDFARIsAANWRnRlVNW0RKQxAXKVgTTipCZQaMkn6Cc_s5B7OKUDoHz-RuJqH5hg9DwaAg54EALw_wcB&ohost=www.google.com&cid=CAESVeD2NYLeemerHHrdQU-mNiJX
[Accessed 21 5 2024].

Elgiganten A/S, 2024. Meta Quest 3 VR bærbart headset (128 GB). [Online]
Available at: https://www.elgiganten.dk/product/gaming/vr-gaming-virtual-reality/meta-quest-3-vr-barbart-headset-128-gb/655770?gad_source=1&gclid=Cj0KCQjwxqayBhDFARIsAANWRnTjlLjzzTyIaIBWYE5z6i0kCMimXbWN59PpGQBfvdub5W2npHqCD-QaAk4uEALw_wcB
[Accessed 21 5 2024].

Elgiganten A/S, 2024. PlayStation 5 Slim Digital Edition (2023). [Online]
Available at: https://www.googleadservices.com/pagead/aclk?sa=L&ai=DChcSEwidkrT-2JmGAxXmEKIDHd3QDhUYABAKGgJsZQ&ase=2&gclid=Cj0KCQjwxqayBhDFARIsAANWRnRw6gOjbbbJsSSj_gZQqYnknz5guvV-0XQn8hjqbkW6_OP9guWin88aAl59EALw_wcB&ohost=www.google.com&cid=CAESVeD2AwOwSU8Nh3EY3JgQi5gN
[Accessed 21 5 2024].

Elgiganten A/S, 2024. Ring Fit Adventure - Switch. [Online]
Available at: https://www.elgiganten.dk/product/gaming/spil/ring-fit-adventure-switch/54019?gad_source=1&gclid=Cj0KCQjwxqa
yBhDFARIsAANWRnTbEIJmUM
ykLgO2Nad64ldynbIDqaxondRiynjycB1Zjgz
Yrcz5kg4aAt6VEALw_wcB
[Accessed 21 5 2024].

Eppinger, S. & Ulrich, K., 2016. Product Design and Development. s.l.:McGraw-Hill Education.

EUR-Lex, 2009. DIRECTIVE 2009/48/EC OF THE EUROPEAN PARLIAMENT AND OF THE COUNCIL. [Online]
Available at: https://eur-lex.europa.eu/legal-content/EN/TXT/?uri=CELEX%3A32009L0048
[Accessed 14 5 2024].

European Commission, 2023. Right to repair: Commission introduces new consumer rights for easy and attractive repairs. [Online]
Available at: https://ec.europa.eu/commission/presscorner/detail/en/ip_23_1794
[Accessed 16 5 2024].

F

Fadhli, M. et al., 2019. A Meta-Analysis of Selected Studies on the Effectiveness of Gamification Method for Children, s.l.: s.n.

Fitwizekids, 2024. WALL ACTIVE GAME. [Online]
Available at: https://fitwize4kids.com/product-category/wall-active-game/
[Accessed 21 5 2024].

H

Holodia, 2019. Myth: VR Fitness is Expensive. Here Is the Price Calculator. [Online]
Available at: https://www.holodia.com/vr-fitness-blog/myth-vr-fitness-is-expensive-here-is-the-price-calculator/
[Accessed 21 5 2024].

I

I.C.E Aluminium Pte Ltd, 2024. Aluminium in Electronics: Advantages and Applications. [Online]
Available at: https://www.icealum.com/post/aluminium-in-electronics-advantages-and-applications
[Accessed 18 5 2024].

Inter IKEA Systems B.V., 2024. LACK. [Online]
Available at: https://www.ikea.com/dk/da/p/lack-sidebord-hvid-30449908/
[Accessed 15 5 2024].

Interaction Design Foundation, 2024. Design Thinking (DT). [Online]
Available at: https://www.designpsykologi.dk/hvad-er-double-diamond
[Accessed 21 5 2024].

K

Kenton, W., Boyle, M. J. & Kvilhaug, S., 2023. Triple Bottom Line. [Online]
Available at: https://www.investopedia.com/terms/t/triple-bottom-line.asp
[Accessed 16 5 2024].

Kernaghan, C., 2022. UX Design for Children: How to Create a Product Children Will Love. [Online]
Available at: https://uxmag.com/articles/ux-design-for-children-how-to-create-a-product-children-will-love
[Accessed 21 5 2024].

Kid Sense, 2024. Fine Motor Skills. [Online]
Available at: https://childdevelopment.com.au/areas-of-concern/fine-motor-skills/
[Accessed 4 3 2024].

Klinik Syn og Indlæring, 2024. Velkommen til Klinik Syn og Indlæring. [Online]
Available at: http://synogindlaering.dk/
[Accessed 21 5 2024].

Kokkegård, H., 2014. DR - Computerspil gør børn bedre til engelsk. [Online]
Available at: https://www.dr.dk/nyheder/viden/tech/computerspil-goer-boern-bedre-til-engelsk
[Accessed 9 4 2024].

Krefeld, K., 2024. Derfor skal ungerne ud i naturen. [Online]
Available at: https://www.dcu.dk/da/artikler/derfor-skal-ungerne-ud-i-naturen
[Accessed 5 3 2024].

L

LEO'S Legeland, 2024. LEO'S - Leg, sjov & eventyr. [Online]
Available at: https://www.leoslegeland.dk/
[Accessed 4 4 2024].

Lillard, S. A., 2015. The Development of Play. In: Handbook of Child Psychology and Developmental Science. s.l.:R.M. Lerner (Ed), pp. 425-433.

M

Masis, A., 2024. OrthoRehab - 5 Common Reasons People Don't Follow Through With Physical Therapy. [Online]
Available at: https://www.orthorehabpt.com/5-common-reasons-people-dont-follow-through-with-physical-therapy/
[Accessed 5 4 2024].

Meneta Holding A/S, 2024. Meneta. [Online]
Available at: https://meneta.dk/
[Accessed 18 5 2024].

Meta, 2024. Sikkerhedsoplysninger for Meta Quest til forældre og tweens. [Online]
Available at: https://www.meta.com/dk/quest/parent-info/
[Accessed 5 3 2024].

Miniland, 2024. The Benefits of Interactive Games for Children. [Online]
Available at: https://usa.minilandeducational.com/family/the-benefits-of-interactive-games-for-children/
[Accessed 8 5 2024].

MODU ApS, 2024. byggelegetøj til aktiv leg i hjemmet. [Online]
Available at: https://da.modutoy.com/?cmp_id=14985729567&adg_id=129360695260&kwd=modu&device=c&gad_source=1&gclid=CjwKCAiA_5WvBhBAEiwAZtCU70DKfW8aevBS3Ak51qhIDsIitABbhWOowUhiOzUfBs7KezjPzHt3IhoCIhgQAvD_BwE
[Accessed 4 3 2024].

MÅLBAR, 2024. You can control, what you can measure. [Online]
Available at: https://www.maalbar.dk/
[Accessed 21 5 2024].

N

National Library of Medicine, 2023. In brief: How does our sense of balance work?. [Online]
Available at: In brief: How does our sense of balance work?
[Accessed 5 4 2024].

NEUROSCIENTIFICALLY CHALLENGED, 2024. KNOW YOUR BRAIN: VESTIBULAR SYSTEM. [Online]
Available at: https://neuroscientificallychallenged.com/posts/know-your-brain-vestibular-system
[Accessed 26 3 2024].

O

OMEGA, 2024. What are Load Cells and How Do They Work?. [Online]
Available at: https://www.omega.com/en-us/resources/load-cells
[Accessed 14 5 2024].

OT for Kids, 2024. Fine Motor Difficulties. [Online]
Available at: https://www.otforkids.co.uk/problems-we-help/fine-motor-difficulties.php
[Accessed 4 3 2024].

OT for Kids, 2024. Gross Motor Difficulties. [Online]
Available at: https://www.otforkids.co.uk/problems-we-help/gross-motor-difficulties.php
[Accessed 4 3 2024].

P

Park N Play Design, 2023. The Benefits Of Interactive Play For Child Development. [Online]
Available at: https://www.parknplaydesign.com/post/the-benefits-of-interactive-play-for-child-development
[Accessed 8 5 2024].

PARTDESIGN ApS, 2024. Partdesign. [Online]
Available at: https://www.partdesign.dk/
[Accessed 17 5 2024].

Pedersen, T. P., Pant, S. W. & Ammitzbøll, J., 2020. Motorisk udvikling ved indskolingsalderen. Temarapport for skoleåret 2018/19.

Playshop, 2024. Nintendo Switch OLED Model - White. [Online]
Available at: https://www.playshop.dk/nintendo-switch-oled-model-white
[Accessed 21 5 2024].

PriceRunner, 2024. Gonge Floor Surfer. [Online]
Available at: https://www.pricerunner.dk/pl/72-4910914/Legetoej/Gonge-Floor-Surfer-Sammenlign-Priser
[Accessed 3 5 2024].

R

Ramaswamy, S. & Rosala, M., 2024. The Wizard of Oz Method in UX. [Online]
Available at: https://www.nngroup.com/articles/wizard-of-oz/
[Accessed 14 5 2024].

S

Siebert, A. & Gopaldas, A., 2022. What You're Getting Wrong About Customer Journeys. [Online]
Available at: https://hbr.org/2022/07/what-youre-getting-wrong-about-customer-journeys
[Accessed 9 4 2024].

Skumhuset, 2024. Skumhuset. [Online]
Available at: https://skumhuset.dk/
[Accessed 17 5 2024].

Smoot, J., 2024. Tactile Switches 101. [Online]
Available at: https://www.cuidevices.com/blog/tactile-switches-101
[Accessed 14 5 2024].

Sofiendal Sundhedsteam, 2024. Motorikterapi. [Online]
Available at: https://motorikterapi.dk/
[Accessed 21 5 2024].

Sony, 2024. Playstation VR Worlds. [Online]
Available at: https://www.playstation.com/en-dk/games/playstation-vr-worlds/
[Accessed 5 3 2024].

StoryToys, 2024. Apps to help your child learn, play, and grow. [Online]
Available at: https://storytoys.com/
[Accessed 21 5 2024].

Sundhedsstyrelsen, 2023. Skærme fylder mere i vores liv, og det kan påvirke vores mentale sundhed og trivsel. [Online]
Available at: https://sst.dk/da/nyheder/2023/skaerme-fylder-mere-i-vores-liv-og-det-kan-paavirke-vores-mentale-sundhed-og-trivsel
[Accessed 13 4 2024].

Sygebørn, 2024. Sygebørn - Trivsel og vækst. [Online]
Available at: https://www.sygeboern.dk/trivsel-vaekst/piger-6-18-aar
[Accessed 11 3 2024].

U

UMMC Health Care, 2024. Vestibular (Balance) Exercises. [Online]
Available at: https://www.umc.edu/Healthcare/ENT/Patient-Handouts/Adult/Otology/Vestibular_Exercises.html
[Accessed 10 4 2024].

Understood for All, Inc, 2024. Understanding developmental coordination disorder (DCD). [Online]
Available at: https://www.understood.org/en/articles/understanding-developmental-coordination-disorder-dcd
[Accessed 4 3 2024].

V

Vessi, 2024. A Complete Guide To Children's Shoes Size By Age. [Online]
Available at: https://vessi.com/blogs/the-forecast/a-complete-guide-to-childrens-shoes-size-by-age
[Accessed 15 5 2024].

Watson, S., 2023. Balance Training. [Online]
Available at: https://www.webmd.com/fitness-exercise/a-z/balance-training
[Accessed 5 4 2024].

W

Wensveen, S., Djajadiningrat, J. P. & Overbeeke, K. C. J., 2004. Interaction frogger: A design framework to couple action and function through feedback and feedforward. DIS '04: Proceedings of the 5th conference on Designing interactive systems: processes, practices, methods, and techniques, 1 8, pp. 177-184.

Winther A/S, 2024. Gonge. [Online]
Available at: https://www.gonge.com/
[Accessed 4 3 2024].

Wolfe, K., 2018. People Don’t Buy Products. They Buy Solutions to Their Problems. [Online]
Available at: https://wpwolfepress.com/people-buy-solutions-to-their-problems/
[Accessed 21 5 2024].

AA/Å

AAG, 2024. AAG Rubber Qualities. [Online]
Available at: /https://aag.world/images/content/pdf/AAG%20Chemical%20resistance%20table_lav.pdf
[Accessed 15 5 2024]

Illustrations

Ill. 01-60 own illustrations / pictures
Ill. 61 Games for research,
https://www.rocketleague.com/ [Accessed 28 5 2024].
https://www.minecraft.net/da-dk/about-minecraft [Accessed 28 5 2024].
https://www.roblox.com/catalog [Accessed 28 5 2024].
https://www.nintendo.com/us/store/products/animal-crossing-new-horizons-switch/ [Accessed 28 5 2024].
https://www.nintendo.com/us/store/products/super-mario-odyssey-switch/ [Accessed 28 5 2024].
Ill. 62 Gamification in use,
https://www.amazon.com/Learn-to-Read-Duolingo-ABC/dp/B0BL42811W [Accessed 28 5 2024].
https://www.techadvisor.com/article/727653/fitbit-vs-apple-watch.html [Accessed 28 5 2024].
Ill. 63-86 own illustrations / pictures
Ill. 87 LEGO Duplo,
https://apps.apple.com/dk/app/lego-duplo-world/id1458749093 [Accessed 28 5 2024].
Ill. 88-91 own illustrations / pictures
Ill. 92 Outdoor exergame,
https://www.yalp.com/solutions/interactive-play/ [Accessed 28 5 2024].
Ill. 93-111 own illustrations / pictures
Ill. 112 Floor Surfer,
https://www.gonge.com/products/floor-surfer [Accessed 28 5 2024].
Ill. 113-118 own illustrations / pictures
Ill. 119 LED Light,
source=1&gclid=CjwKCAjw0YGyBhByEiwAQmBEWqm2AKmC
9IkVv6KZAd1wE27O0CwakKoEQ53Z5S4pngyBy4hJLpInXRoCq
PUQAvD_BwE [Accessed 28 5 2024].
Ill. 120 Speaker,
https://arduinotech.dk/shop/hoejttaler-8ohm-1w-30mm-mini-speaker/ [Accessed 28 5 2024].
Ill. 121 Amplifier,
https://www.amazon.com/3V-12V-LM386-Amplifier-Module-Adjustable/dp/B09FX7TPP9 [Accessed 28 5 2024].
Ill. 122-128 own illustrations / pictures
Ill. 129 Tactile Switch,
https://ardustore.dk/produkt/tactile-print-push-button-6x6x5mm?gad_
source=1&gclid=CjwKCAjwl4yyBhAgEiwADSEjeJbYtlSFgrB5ziB4iOe0Cm0OW7hygJTNctIlKTYq0LPkIxiOljKTMRoC8sYQAvD_BwE [Accessed 28 5 2024].
Ill. 130-132 own illustrations / pictures
Ill. 133 Piezoresistive sensor,
https://www.digikey.dk/da/products/detail/ohmite/FSR06BE/10127623?utm_adgroup=&utm_source=google&utm_medium=cpc&utm_campaign=PMAX%20
Shopping_Supplier_DK%2B&utm_term=&productid=10127623&utm_content=&utm_id=go_cmp-20257901512_adg-_ad-__dev-c_ext-_prd-10127623_sig-CjwKCAj
wl4yyBhAgEiwADSEjeEz878fSn-di9ym-wGewtggWxv0jIS-yqtPVabRWX0MVepR6wqOdWRoC8LgQAvD_BwE&gad_source=1&gclid=CjwKCAjwl4yyBhAgEiwADSEjeEz
878fSn-di9ym-wGewtggWxv0jIS-yqtPVabRWX0MVepR6wqOdWRoC8LgQAvD_BwE [Accessed 28 5 2024].
Ill. 134 Strain Gauge Sensor,
https://dk.rs-online.com/web/p/strain-gauges/2163487?cm_mmc=DK-PLA-DS3A-_-google-_-CSS_DK_DK_Pmax_Test-_--_-2163487&matchtype=&&gad_
source=1&gclid=CjwKCAjwl4yyBhAgEiwADSEjeC6KDnUvjGg18nL894DvN4MIQSCQp6joD7vZuWXKSm8lrSOOmhBMXhoC7zsQAvD_BwE&gclsrc=aw.ds [Accessed
28 5 2024].
Ill. 135-144 own illustrations / pictures
Ill. 145 Raspberry Pi Pico W,
https://www.raspberrypi.com/products/raspberry-pi-pico/ [Accessed 28 5 2024].
Ill. 146 own illustrations / pictures & Airpods,
https://www.apple.com/dk/airpods-pro/ [Accessed 28 5 2024].
Ill. 147 own illustration / picture
Ill. 148 Battery,
https://www.amazon.com/KBT-1200mAh-Rechargeable-Replacement-Compatible/dp/B0C243MXMQ?th=1 [Accessed 28 5 2024].
Ill. 149-150 own illustrations / pictures
Ill. 151 own illustration / picture & Titan EVO concept,
https://secretlab.eu/da/pages/technology [Accessed 28 5 2024].
Ill. 152-164 own illustrations / pictures
Ill. 165 Leif,
https://www.partdesign.dk/contact/ [Accessed 28 5 2024].
Ill. 166 Christian,
https://www.partdesign.dk/contact/ [Accessed 28 5 2024].
Ill. 167-172 own illustrations / pictures
Ill. 173 Regulator,
https://www.mouser.dk/ProductDetail/DFRobot/
FIT0869?qs=Li%252BoUPsLEnuzp%2Fg08qOGUA%3D%3D&srsltid=AfmBOoo6EfPfCTSPObimjb0l6LswnbyC5glk5onkoSYotUYV9y80EvxtJUE [Accessed 28 5 2024].
Ill. 174-183 own illustrations / pictures
Ill. 184 Honeycomb-paper-filled,
https://www.ikea.com/dk/da/p/lack-sidebord-hvid-30449908/ [Accessed 28 5 2024].
Ill. 185-188 own illustrations / pictures
Ill. 189 Materials,
https://pladerpaamaal.dk/vare/mdf-122-x-244-cm/ [Accessed 28 5 2024].
https://www.silvan.dk/traefiberplade-trae-610-mm-1220-mm-3-mm?id=4200-2093787&gad_source=1&gclid=CjwKCAjwr7ayBhAPEiwA6EIGxFSgFxV40Abo3y_
wUPtgBzq6IkB5QyqJyo8JNeRs7qBmsrco1FxVLhoCvFMQAvD_BwE [Accessed 28 5 2024].
https://nelcos.com/product/nelcos-s127-solid-color-interior-film-solid-color-collection/ [Accessed 28 5 2024].
https://amprod.us/types-of-steel/ [Accessed 28 5 2024].
https://www.omegaplasticsgroup.co.uk/insights/news/industry-insights/plastic-material-choice/ [Accessed 28 5 2024].
https://ardustore.dk/produkt/5mm-blue-color-led-diodes [Accessed 28 5 2024].
Ill. 190-202 own illustrations / pictures